VDA Verband der Automobilindustrie

Transport Order

Recommendation VDA 4933 Part 1

Version 3.3, October 2026



Short Description

This recommendation describes the use of UN/EDIFACT message DESADV for transport orders in the packaging supply chain of the automotive industry.

Disclaimer

The VDA Recommendations are recommendations that may be freely adopted by anyone. Users are responsible for correct implementation of the recommendations as required on a case-by-case basis.

The recommendations take into account the prevailing technology at the time of publication. Use of the VDA Recommendations does not absolve anyone from responsibility for his/her own actions, and all users act at their own risk. Liability of VDA and those involved in drafting of VDA Recommendations is excluded.

If you notice any errors, omissions or ambiguities in these recommendations, please contact VDA without delay so that these errors can be rectified.

Publisher	Verband der Automobilindustrie e.V. (VDA) BehrenStraße 35, 10117 Berlin www.vda.de
	This recommendation was developed by AK SID.

Copyright	Verband der Automobilindustrie e.V. (VDA)
	Reprint, also in extracts, is only permitted, if the source is stated.

Version	Version 3.3, October 2026

Table of contents

Table of contents 3
List of changes 4
Structure of an UN/EDIFACT interchange 23
Branching diagram 24
Message structure 39
Segment details 44
Applicable codes 192

COPYRIGHT VDA 2026

List of changes

No.	Change Change Request	Date	Version	Segment(-group) and data element
01	2026-005 Segment added: DTM+132 Gefordertes Ankunftsdatum/-zeit für diesen Transportabschnitt / Required arrival date and time for this transport leg	2026-10-30	3.3	66 SG7 DTM *SG6#1\SG7#2* Place of arrival Required arrival date and time for this transport leg
02	2026-005 Segment added: DTM+133 Gefordertes Abfahrtsdatum/-zeit für diesen Transportabschnitt / Required departure date and time for this transport leg.	2026-10-30	3.3	64 SG7 DTM *SG6#1\SG7#1* Place of departure Required departure date and time for this transport leg
03	2026-003 RFF+VA added.	2026-10-30	3.3	57 SG3 RFF *SG2#7\SG3#2* VAT registration number VAT registration number
04	2026-003 RFF+FC added.	2026-10-30	3.3	56 SG3 RFF *SG2#7\SG3#1* Fiscal number Fiscal number
05	2026-003 RFF+VA added.	2026-10-30	3.3	54 SG3 RFF *SG2#6\SG3#2* VAT registration number VAT registration number
06	2026-003 RFF+FC added.	2026-10-30	3.3	53 SG3 RFF *SG2#6\SG3#1* Fiscal number Fiscal number
07	2026-003 Remark added: Im Sinne von DeCA (Spanien) handelt es sich hier um den Frachtbeauftrager./In accordance with DeCA (Spain), this refers to the person who orders the freight.	2026-10-30	3.3	52 SG2 NAD *SG2#6* Transport ordering party Transport ordering party - name and address
08	2026-003 RFF+VA added.	2026-10-30	3.3	49 SG3 RFF *SG2#5\SG3#3* VAT registration number VAT registration number
09	2026-003 RFF+FC added.	2026-10-30	3.3	48 SG3 RFF *SG2#5\SG3#2* Fiscal number Fiscal number
10	2026-003 RFF+VA added.	2026-10-30	3.3	45 SG3 RFF *SG2#4\SG3#3* VAT registration number VAT registration number
11	2026-003 RFF+FC added.	2026-10-30	3.3	44 SG3 RFF *SG2#4\SG3#2* Fiscal number Fiscal number

COPYRIGHT VDA 2026

List of changes

No.	Change Change Request	Date	Version	Segment(-group) and data element
12	2026-003 RFF+VA added.	2026-10-30	3.3	41 SG3 RFF *SG2#3\SG3#3* VAT registration number VAT registration number
13	2026-003 RFF+FC added.	2026-10-30	3.3	40 SG3 RFF *SG2#3\SG3#2* Fiscal number Fiscal number
14	2026-003 RFF+VA added.	2026-10-30	3.3	37 SG3 RFF *SG2#2\SG3#4* VAT registration number VAT registration number
15	2026-003 RFF+FC added.	2026-10-30	3.3	35 SG3 RFF *SG2#2\SG3#2* Fiscal number Fiscal number
16	2026-003 RFF+VA added.	2026-10-30	3.3	27 SG3 RFF *SG2#1\SG3#4* VAT registration number VAT registration number
17	2026-003 RFF+FC added.	2026-10-30	3.3	26 SG3 RFF *SG2#1\SG3#3* Fiscal number Fiscal number
18	2026-003 Neues ALI-Segment - DeCA-relevant / New ALI segment - Relevant to DeCA	2026-10-30	3.3	09 ALI Relevant to DeCA
19	2026-003 Code changed GAVI32-> GAVI33	2026-10-30	3.3	03 UNH S009 0057 Message header
20	2023-009 Gelöscht / Deleted: Code specifying the unit of measurement, use UN/ECE Rec. 20 / Maßeinheit, codiert gem. UN/ECE Rec. 20	2025-09-10	3.2	127 SG21 DGS C223 6411 *SG11#2\SG19#1\SG21#1* Dangerous goods information Dangerous goods
21	2023-009 Gelöscht / Deleted: Code specifying the unit of measurement, use UN/ECE Rec. 20 / Maßeinheit, codiert gem. UN/ECE Rec. 20	2025-09-10	3.2	120 SG19 QTY C186 6411 *SG11#2\SG19#1* Article and Despatched Article Quantity to be delivered
22	Korrektur Status O --> R	2025-09-10	3.2	120 SG19 QTY C186 6411 *SG11#2\SG19#1* Article and Despatched Article Quantity to be delivered
23	2023-009 Gelöscht / Deleted: Code specifying the unit of measurement, use UN/ECE Rec. 20 / Maßeinheit, codiert gem. UN/ECE Rec. 20	2025-09-10	3.2	119 SG19 QTY C186 6411 *SG11#2\SG19#1* Article and Despatched Article Despatched quantity

COPYRIGHT VDA 2026

List of changes

No.	Change Change Request	Date	Version	Segment(-group) and data element
24	Korrektur Status O --> R	2025-09-10	3.2	119 SG19 QTY C186 6411 *SG11#2\SG19#1* Article and Despatched Article Despatched quantity
25	2023-009 Gelöscht / Deleted: Code specifying the unit of measurement, use UN/ECE Rec. 20 / Maßeinheit, codiert gem. UN/ECE Rec. 20	2025-09-10	3.2	118 SG19 MEA C174 6411 *SG11#2\SG19#1* Article and Despatched Article Net explosive mass
26	Korrektur Status C --> R	2025-09-10	3.2	118 SG19 MEA C174 6411 *SG11#2\SG19#1* Article and Despatched Article Net explosive mass
27	Korrektur Status C --> R	2025-09-10	3.2	117 SG19 MEA C174 6411 *SG11#2\SG19#1* Article and Despatched Article Measurements
28	2023-009 Gelöscht / Deleted: Code specifying the unit of measurement, use UN/ECE Rec. 20 / Maßeinheit, codiert gem. UN/ECE Rec. 20	2025-09-10	3.2	116 SG19 MEA C174 6411 *SG11#2\SG19#1* Article and Despatched Article Net weight of the product
29	2023-009 Gelöscht / Deleted: Code specifying the unit of measurement, use UN/ECE Rec. 20 / Maßeinheit, codiert gem. UN/ECE Rec. 20	2025-09-10	3.2	106 SG12 QTY C186 6411 *SG11#2\SG12#1* Group of inner packaging items Maximum stackability
30	2023-009 Gelöscht / Deleted: Code specifying the unit of measurement, use UN/ECE Rec. 20 / Maßeinheit, codiert gem. UN/ECE Rec. 20	2025-09-10	3.2	105 SG12 QTY C186 6411 *SG11#2\SG12#1* Group of inner packaging items Actual quantity per package
31	Korrektur Status O --> R	2025-09-10	3.2	105 SG12 QTY C186 6411 *SG11#2\SG12#1* Group of inner packaging items Actual quantity per package
32	Korrektur Status C --> R	2025-09-10	3.2	104 SG12 MEA C174 6411 *SG11#2\SG12#1* Group of inner packaging items Maximum stacking weight
33	2023-009 Gelöscht / Deleted: Code specifying the unit of measurement, use UN/ECE Rec. 20 / Maßeinheit, codiert gem. UN/ECE Rec. 20	2025-09-10	3.2	103 SG12 MEA C174 6411 *SG11#2\SG12#1* Group of inner packaging items Maximum stackability for transport purposes
34	Korrektur Status C --> R	2025-09-10	3.2	103 SG12 MEA C174 6411 *SG11#2\SG12#1* Group of inner packaging items Maximum stackability for transport purposes
35	Korrektur Status C --> R	2025-09-10	3.2	102 SG12 MEA C174 6411 *SG11#2\SG12#1* Group of inner packaging items Package volume

COPYRIGHT VDA 2026

List of changes

No.	Change Change Request	Date	Version	Segment(-group) and data element
36	2023-009 Gelöscht / Deleted: Code specifying the unit of measurement, use UN/ECE Rec. 20 / Maßeinheit, codiert gem. UN/ECE Rec. 20	2025-09-10	3.2	101 SG12 MEA C174 6411 *SG11#2\SG12#1* Group of inner packaging items Height
37	Korrektur Status C --> R	2025-09-10	3.2	101 SG12 MEA C174 6411 *SG11#2\SG12#1* Group of inner packaging items Height
38	2023-009 Gelöscht / Deleted: Code specifying the unit of measurement, use UN/ECE Rec. 20 / Maßeinheit, codiert gem. UN/ECE Rec. 20	2025-09-10	3.2	100 SG12 MEA C174 6411 *SG11#2\SG12#1* Group of inner packaging items Width
39	Korrektur Status C --> R	2025-09-10	3.2	100 SG12 MEA C174 6411 *SG11#2\SG12#1* Group of inner packaging items Width
40	2023-009 Gelöscht / Deleted: Code specifying the unit of measurement, use UN/ECE Rec. 20 / Maßeinheit, codiert gem. UN/ECE Rec. 20	2025-09-10	3.2	99 SG12 MEA C174 6411 *SG11#2\SG12#1* Group of inner packaging items Length
41	Korrektur Status C --> R	2025-09-10	3.2	99 SG12 MEA C174 6411 *SG11#2\SG12#1* Group of inner packaging items Length
42	Korrektur Status C --> R	2025-09-10	3.2	98 SG12 MEA C174 6411 *SG11#2\SG12#1* Group of inner packaging items Tare weight
43	2023-009 Gelöscht / Deleted: Code specifying the unit of measurement, use UN/ECE Rec. 20 / Maßeinheit, codiert gem. UN/ECE Rec. 20	2025-09-10	3.2	97 SG12 MEA C174 6411 *SG11#2\SG12#1* Group of inner packaging items Net weight of the (individual) packaging item
44	Korrektur Status C --> R	2025-09-10	3.2	97 SG12 MEA C174 6411 *SG11#2\SG12#1* Group of inner packaging items Net weight of the (individual) packaging item
45	2023-009 Gelöscht / Deleted: Code specifying the unit of measurement, use UN/ECE Rec. 20 / Maßeinheit, codiert gem. UN/ECE Rec. 20	2025-09-10	3.2	96 SG12 MEA C174 6411 *SG11#2\SG12#1* Group of inner packaging items Gross weight of the inner packaging item
46	Korrektur Status C --> R	2025-09-10	3.2	96 SG12 MEA C174 6411 *SG11#2\SG12#1* Group of inner packaging items Gross weight of the inner packaging item

COPYRIGHT VDA 2026

List of changes

No.	Change Change Request	Date	Version	Segment(-group) and data element
47	2024-006 Deleted: Genaue Anwendungsanleitungen zum Aufbau der Verpackungsstrukturen sind in einer separaten Dokumentation als Anlage zur Empfehlung verfügbar. For detailed instructions regarding packaging structures, see separate documentation in the appendix of the VDA recommendation.	2025-09-10	3.2	94 SG11 CPS *SG11#2* Despatch control line / group of inner packaging items and article line Consignment packing sequence
48	2024-006 Neu/New: Die konkrete Abbildung der Verpackungshierarchien wird in der VDA 4987 Teil 1 bis Teil 4 ausführlich beschrieben und ist hier ebenso anzuwenden. The specific representation of packaging hierarchies is described in detail in VDA 4987 Parts 1 to 4 and is also applicable here.	2025-09-10	3.2	94 SG11 CPS *SG11#2* Despatch control line / group of inner packaging items and article line Consignment packing sequence
49	Korrektur Status C --> R	2025-09-10	3.2	92 SG17 MEA C174 6411 *SG11#1\SG12#1\SG14#1\SG17#1* Individual handling unit's weights Tare weight
50	2023-009 Gelöscht / Deleted: Code specifying the unit of measurement, use UN/ECE Rec. 20 / Maßeinheit, codiert gem. UN/ECE Rec. 20	2025-09-10	3.2	90 SG17 MEA C174 6411 *SG11#1\SG12#1\SG14#1\SG17#1* Individual handling unit's weights Gross weight
51	Korrektur Status C --> R	2025-09-10	3.2	90 SG17 MEA C174 6411 *SG11#1\SG12#1\SG14#1\SG17#1* Individual handling unit's weights Gross weight
52	2023-009 Gelöscht / Deleted: Code specifying the unit of measurement, use UN/ECE Rec. 20 / Maßeinheit, codiert gem. UN/ECE Rec. 20	2025-09-10	3.2	84 SG12 QTY C186 6411 *SG11#1\SG12#1* Handling unit group details Maximum stackability
53	2023-009 Gelöscht / Deleted: Code specifying the unit of measurement, use UN/ECE Rec. 20 / Maßeinheit, codiert gem. UN/ECE Rec. 20	2025-09-10	3.2	83 SG12 MEA C174 6411 *SG11#1\SG12#1* Handling unit group details Maximum stackability for transport purposes
54	Korrektur Status C --> R	2025-09-10	3.2	83 SG12 MEA C174 6411 *SG11#1\SG12#1* Handling unit group details Maximum stackability for transport purposes
55	2023-009 Gelöscht / Deleted: Code specifying the unit of measurement, use UN/ECE Rec. 20 / Maßeinheit, codiert gem. UN/ECE Rec. 20	2025-09-10	3.2	82 SG12 MEA C174 6411 *SG11#1\SG12#1* Handling unit group details Maximum stacking weight

COPYRIGHT VDA 2026 Generated by GEFEG.FX

List of changes

No.	Change Change Request	Date	Version	Segment(-group) and data element
56	Korrektur Status C --> R	2025-09-10	3.2	82 SG12 MEA C174 6411 *SG11#1\SG12#1* Handling unit group details Maximum stacking weight
57	2023-009 Gelöscht / Deleted: Code specifying the unit of measurement, use UN/ECE Rec. 20 / Maßeinheit, codiert gem. UN/ECE Rec. 20	2025-09-10	3.2	81 SG12 MEA C174 6411 *SG11#1\SG12#1* Handling unit group details Volume
58	2023-009 Gelöscht / Deleted: Code specifying the unit of measurement, use UN/ECE Rec. 20 / Maßeinheit, codiert gem. UN/ECE Rec. 20	2025-09-10	3.2	80 SG12 MEA C174 6411 *SG11#1\SG12#1* Handling unit group details Height
59	2023-009 Gelöscht / Deleted: Code specifying the unit of measurement, use UN/ECE Rec. 20 / Maßeinheit, codiert gem. UN/ECE Rec. 20	2025-09-10	3.2	79 SG12 MEA C174 6411 *SG11#1\SG12#1* Handling unit group details Width
60	Korrektur Status C --> R	2025-09-10	3.2	79 SG12 MEA C174 6411 *SG11#1\SG12#1* Handling unit group details Width
61	2023-009 Gelöscht / Deleted: Code specifying the unit of measurement, use UN/ECE Rec. 20 / Maßeinheit, codiert gem. UN/ECE Rec. 20	2025-09-10	3.2	78 SG12 MEA C174 6411 *SG11#1\SG12#1* Handling unit group details Length
62	Korrektur Status C --> R	2025-09-10	3.2	78 SG12 MEA C174 6411 *SG11#1\SG12#1* Handling unit group details Length
63	2024-006 Neu/New: Die konkrete Abbildung der Verpackungshierarchien wird in der VDA 4987 Teil 1 bis Teil 4 ausführlich beschrieben und ist hier ebenso anzuwenden. The specific representation of packaging hierarchies is described in detail in VDA 4987 Parts 1 to 4 and is also applicable here.	2025-09-10	3.2	76 SG11 CPS *SG11#1* Despatch control line / List of handling unit groups Consignment packing sequence
64	Korrektur Status C --> R	2025-09-10	3.2	13 MEA C174 6411 Number of handling units in shipment
65	2023-009 Gelöscht / Deleted: Code specifying the unit of measurement, use UN/ECE Rec. 20 / Maßeinheit, codiert gem. UN/ECE Rec. 20	2025-09-10	3.2	12 MEA C174 6411 Consignment's loading meters
66	Korrektur Status C --> R	2025-09-10	3.2	12 MEA C174 6411 Consignment's loading meters

COPYRIGHT VDA 2026

List of changes

No.	Change Change Request	Date	Version	Segment(-group) and data element
67	Korrektur Status C --> R	2025-09-10	3.2	11 MEA C174 6411 Total loading meter of the transport
68	Korrektur Status C --> R	2025-09-10	3.2	10 MEA C174 6411 Consignment's gross weight
69	2023-013 Codes added: 7, 8, 9.	2025-04-25	3.2	61 SG6 TDT C003 7041 *SG6#1* Means of transport Transport information
70	2025-003 Segment RFF+PE hinzugefügt.	2025-04-25	3.2	36 SG3 RFF *SG2#2\SG3#3* Additional party ID - plant number Additional party ID - plant number
71	2025-003 Segment RFF+PE hinzugefügt.	2025-04-25	3.2	25 SG3 RFF *SG2#1\SG3#2* Additional party ID - plant number Additional party ID - plant number
72	2025-005 Code 205 added.	2025-04-25	3.2	05 DTM C507 2379 Message date
73	Beschluss des AK SID 2025-03 Code changed GAVI31-> GAVI32	2025-04-25	3.2	03 UNH S009 0057 Message header
74	2025-004 Hinzugefügt: C553	2025-04-18	3.1	132 SG22 LOC C553 *SG11#2\SG19#1\SG22#2* Internal place of destination Internal place of destination
75	2025-004 Hinzugefügt: C553	2025-04-18	3.1	131 SG22 LOC C553 *SG11#2\SG19#1\SG22#1* Place of discharge Place of discharge
76	2025-004 Hinzugefügt: C553	2025-04-18	3.1	70 SG7 LOC C553 *SG6#2\SG7#2* Place of arrival Current place of arrival
77	2025-004 Hinzugefügt: C553	2025-04-18	3.1	68 SG7 LOC C553 *SG6#2\SG7#1* Place of departure Current place of departure
78	2025-004 Hinzugefügt: C553	2025-04-18	3.1	65 SG7 LOC C553 *SG6#1\SG7#2* Place of arrival Current place of arrival
79	2025-004 Hinzugefügt: C553	2025-04-18	3.1	63 SG7 LOC C553 *SG6#1\SG7#1* Place of departure Current place of departure

COPYRIGHT VDA 2026

List of changes

No.	Change Change Request	Date	Version	Segment(-group) and data element
80	2025-004 Hinzugefügt: C553	2025-04-18	3.1	59 SG5 LOC C553 *SG5#1* Terms of delivery Incoterms place
81	2025-004 Hinzugefügt: C553	2025-04-18	3.1	33 SG2 LOC C553 *SG2#2* Ship to Place of discharge
82	2025-004 Hinzugefügt: C553	2025-04-18	3.1	23 SG2 LOC C553 *SG2#1* Ship from Shipping location/ Place of loading
83	Beschluss AK SID (EDI) 2023-03-15 Code changed GAVI30-> GAVI31	2023-07-10	3.1	03 UNH S009 0057 Message header
84	AK SID (EDI) 2023-03-15 Hinzugefügt: LOC+60 Aktueller Empfangsort	2023-04-05	3.1	65 SG7 LOC *SG6#1\SG7#2* Place of arrival Current place of arrival
85	AK SID (EDI) 2023-03-15 Hinzugefügt: LOC+5 Versandort	2023-04-05	3.1	63 SG7 LOC *SG6#1\SG7#1* Place of departure Current place of departure
86	2022-09-16 Code SU gelöscht, da nur in 4933 T1 und T3 verwendet.	2022-09-16	3.1	42 SG2 NAD 3035 *SG2#4* Seller / Supplier Seller's name and address
87	2025-005 Code 205 added.	2025-04-25	3.0	71 SG7 DTM C507 2379 *SG6#2\SG7#2* Place of arrival Arrivaldate and time
88	2025-005 Code 205 added.	2025-04-25	3.0	69 SG7 DTM C507 2379 *SG6#2\SG7#1* Place of departure Departure date and time
89	2025-005 Code 205 added.	2025-04-25	3.0	08 DTM C507 2379 Date/time/period
90	2025-005 Code 205 added.	2025-04-25	3.0	07 DTM C507 2379 Estimated arrival date
91	2025-005 Code 721 added.	2025-04-25	3.0	06 DTM C507 2379 Requested shipment or delivery date
92	2021-018 Anpassung an S3 konformen Profil der EDIFACT S4 (ISO 9735 Part 11). / Adaptation to S3 compliant profile of EDIFACT S4 (ISO 9735 Part 11).	2022-01-20	3.0	134 UNZ Interchange trailer

COPYRIGHT VDA 2026

List of changes

No.	Change Change Request	Date	Version	Segment(-group) and data element
93	2021-018 Anpassung an S3 konformen Profil der EDIFACT S4 (ISO 9735 Part 11). / Adaptation to S3 compliant profile of EDIFACT S4 (ISO 9735 Part 11).	2022-01-20	3.0	133 UNT Message trailer
94	2021-019 Format an..256 --> an..35	2022-01-20	3.0	55 SG2 NAD C059 3042 *SG2#7* Ultimate Customer Party Ultimate customers's name and address
95	2021-019 Format an..256 --> an..35	2022-01-20	3.0	55 SG2 NAD C059 3042 *SG2#7* Ultimate Customer Party Ultimate customers's name and address
96	2021-019 Format an..70 --> an..35	2022-01-20	3.0	55 SG2 NAD C080 3036 *SG2#7* Ultimate Customer Party Ultimate customers's name and address
97	2021-019 Format an..70 --> an..35	2022-01-20	3.0	55 SG2 NAD C080 3036 *SG2#7* Ultimate Customer Party Ultimate customers's name and address
98	2021-019 Format an..256 --> an..35	2022-01-20	3.0	52 SG2 NAD C059 3042 *SG2#6* Transport ordering party Transport ordering party - name and address
99	2021-019 Format an..70 --> an..35	2022-01-20	3.0	52 SG2 NAD C080 3036 *SG2#6* Transport ordering party Transport ordering party - name and address
100	2021-019 Format an..70 --> an..35	2022-01-20	3.0	52 SG2 NAD C080 3036 *SG2#6* Transport ordering party Transport ordering party - name and address
101	2021-019 Format an..256 --> an..35	2022-01-20	3.0	46 SG2 NAD C059 3042 *SG2#5* Freight forwarder Freight forwarder's name and address
102	2021-019 Format an..256 --> an..35	2022-01-20	3.0	46 SG2 NAD C059 3042 *SG2#5* Freight forwarder Freight forwarder's name and address
103	2021-019 Format an..70 --> an..35	2022-01-20	3.0	46 SG2 NAD C080 3036 *SG2#5* Freight forwarder Freight forwarder's name and address
104	2021-019 Format an..70 --> an..35	2022-01-20	3.0	46 SG2 NAD C080 3036 *SG2#5* Freight forwarder Freight forwarder's name and address

COPYRIGHT VDA 2026

List of changes

No.	Change Change Request	Date	Version	Segment(-group) and data element
105	2021-019 Format an..256 --> an..35	2022-01-20	3.0	42 SG2 NAD C059 3042 *SG2#4* Seller / Supplier Seller's name and address
106	2021-019 Format an..256 --> an..35	2022-01-20	3.0	42 SG2 NAD C059 3042 *SG2#4* Seller / Supplier Seller's name and address
107	2021-019 Format an..70 --> an..35	2022-01-20	3.0	42 SG2 NAD C080 3036 *SG2#4* Seller / Supplier Seller's name and address
108	2021-019 Format an..256 --> an..35	2022-01-20	3.0	38 SG2 NAD C059 3042 *SG2#3* Buyer Buyer's name and address
109	2021-019 Format an..256 --> an..35	2022-01-20	3.0	38 SG2 NAD C059 3042 *SG2#3* Buyer Buyer's name and address
110	2021-019 Format an..70 --> an..35	2022-01-20	3.0	38 SG2 NAD C080 3036 *SG2#3* Buyer Buyer's name and address
111	2021-019 Format an..70 --> an..35	2022-01-20	3.0	38 SG2 NAD C080 3036 *SG2#3* Buyer Buyer's name and address
112	2021-019 Format an..256 --> an..35	2022-01-20	3.0	32 SG2 NAD C059 3042 *SG2#2* Ship to ShipTo's name and address
113	2021-019 Format an..256 --> an..35	2022-01-20	3.0	32 SG2 NAD C059 3042 *SG2#2* Ship to ShipTo's name and address
114	2021-019 Format an..70 --> an..35	2022-01-20	3.0	32 SG2 NAD C080 3036 *SG2#2* Ship to ShipTo's name and address
115	2021-019 Format an..70 --> an..35	2022-01-20	3.0	32 SG2 NAD C080 3036 *SG2#2* Ship to ShipTo's name and address
116	2021-019 Format an..256 --> an..35	2022-01-20	3.0	22 SG2 NAD C059 3042 *SG2#1* Ship from Ship from

COPYRIGHT VDA 2026

List of changes

No.	Change Change Request	Date	Version	Segment(-group) and data element
117	2021-019 Format an..256 --> an..35	2022-01-20	3.0	22 SG2 NAD C059 3042 *SG2#1* Ship from Ship from
118	2021-019 Format an..70 --> an..35	2022-01-20	3.0	22 SG2 NAD C080 3036 *SG2#1* Ship from Ship from
119	2021-019 Format an..70 --> an..35	2022-01-20	3.0	04 BGM C106 1004 Beginning of message
120	Beschluss AK SID 2021-12 Code changed GAVI29-> GAVI30	2022-01-20	3.0	03 UNH S009 0057 Message header
121	2021-018 Anpassung an S3 konformen Profil der EDIFACT S4 (ISO 9735 Part 11). / Adaptation to S3 compliant profile of EDIFACT S4 (ISO 9735 Part 11).	2022-01-20	3.0	03 UNH Message header
122	2021-018 Anpassung an S3 konformen Profil der EDIFACT S4 (ISO 9735 Part 11). / Adaptation to S3 compliant profile of EDIFACT S4 (ISO 9735 Part 11).	2022-01-20	3.0	02 UNB Interchange header
123	2021-008 Neue / new SG: Subset ID	2021-07-07	3.0	21 SG1 RFF *SG1#8* Subset ID Subset ID
124	2021-009 Neue/new codes: X10-X19	2021-07-06	2.9	62 SG6 TMD C219 8335 *SG6#1* Means of transport Transport movement type
125	2021-009 Neue/new C290	2021-07-06	2.9	61 SG6 TDT C290 *SG6#1* Means of transport Transport information
126	2021-002 neu	2021-02-18	2.9	SG22 Internal place of destination
127	Code changed GAVI28 -> GAVI29	2021-02-18	2.9	03 UNH S009 0057 Message header
128	2020-009 Neuer Code / new code X01	2020-03-05	2.9	61 SG6 TDT 8051 *SG6#1* Means of transport Transport information
129	2020-035 Neu/New: 7041 Antriebsart/Power type	2020-12-04	2.8	61 SG6 TDT C003 7041 *SG6#1* Means of transport Transport information

COPYRIGHT VDA 2026

List of changes

No.	Change Change Request	Date	Version	Segment(-group) and data element
130	Beschluss AK SID 2020-12 Code changed GAVI27 --> GAVI28	2020-12-04	2.8	03 UNH S009 0057 Message header
131	2020-035 07A --> 20B	2020-12-04	2.8	03 UNH S009 0054 Message header
132	2020-021 Neue Codes: MLT, DR.	2020-07-01	2.7	120 SG19 QTY C186 6411 *SG11#2\SG19#1* Article and Despatched Article Quantity to be delivered
133	2020-021 Neue Codes: MLT, DR.	2020-07-01	2.7	119 SG19 QTY C186 6411 *SG11#2\SG19#1* Article and Despatched Article Despatched quantity
134	2020-022 Status N --> O	2020-07-01	2.7	113 SG19 LIN 1082 *SG11#2\SG19#1* Article and Despatched Article Line item
135	2020-021 Neue Codes: MLT, DR.	2020-07-01	2.7	105 SG12 QTY C186 6411 *SG11#2\SG12#1* Group of inner packaging items Actual quantity per package
136	2020-0020 Code hinzugefügt: DPU	2020-07-01	2.7	58 SG5 TOD C100 4053 *SG5#1* Terms of delivery Terms of delivery or transport
137	2020-0020 Remark: Die Liste enthaält auch Codes, die in den INCOTETRMS 2010 nicht mehr enthalten sind, da sie noch häufig in der Praxis benutzt werden. --> Die Liste enthaält auch Codes, die in den INCOTETRMS 2010 und/oder 2020 nicht mehr enthalten sind, da sie noch häufig in der Praxis benutzt werden.	2020-07-01	2.7	58 SG5 TOD C100 4053 *SG5#1* Terms of delivery Terms of delivery or transport
138	2020-008 Neue/new codes: X01-X09	2020-03-19	2.7	62 SG6 TMD C219 8335 *SG6#1* Means of transport Transport movement type
139	2020-010 Status R --> O	2020-03-05	2.7	SG20 Order reference
140	2020-013 Neues Segment: MEA+PD+AFN - Nettoexplosivmasse	2020-03-05	2.7	118 SG19 MEA *SG11#2\SG19#1* Article and Despatched Article Net explosive mass
141	2020-009 Neues Segment: MEA+ABR+AFE - Maximale Auflast	2020-03-05	2.7	104 SG12 MEA *SG11#2\SG12#1* Group of inner packaging items Maximum stacking weight

COPYRIGHT VDA 2026

List of changes

No.	Change Change Request	Date	Version	Segment(-group) and data element
142	2020-008 Neues Segment: TMD - Transport movement type	2020-03-05	2.7	62 SG6 TMD *SG6#1* Means of transport Transport movement type
143	2020-004 Neues Segment: RFF+AWU - Pick-Up-Sheet Nummer	2020-03-05	2.7	20 SG1 RFF *SG1#7* Pick-up sheet number Pick-up sheet number
144	2020-003 Neues Segment: MEA+ACA+ACV - Gesamt-Lademeter des Transports	2020-03-05	2.7	11 MEA Total loading meter of the transport
145	2020-002 Neues Segment: MEA+AAX+AAD - Bruttogewicht der Sendung	2020-03-05	2.7	10 MEA Consignment's gross weight
146	Code changed GAVI26 --> GAVI27	2020-03-05	2.7	03 UNH S009 0057 Message header
147	2020-007 Neu / new /enabled	2019-03-05	2.7	61 SG6 TDT C001 8179 *SG6#1* Means of transport Transport information
148	Code changed GAVI25 --> GAVI26	2019-12-31	2.6	03 UNH S009 0057 Message header
149	2019-015 Neues Segment GIN+X01 zur Angabe der Packstückidentifikation, vergeben vom Logistikdienstleister	2019-09-19	2.6	111 SG16 GIN *SG11#2\SG12#1\SG14#1\SG16#4* Package identification, assigned by the logistics service provider Package identification, assigned by the logistics service provider
150	2019-015 Neues Segment GIN+X01 zur Angabe der Packstückidentifikation, vergeben vom Logistikdienstleister	2019-09-19	2.6	88 SG16 GIN *SG11#1\SG12#1\SG14#1\SG16#3* Package identification, assigned by the logistics service provider Package identification, assigned by the logistics service provider
151	2019-004 Neues Segment LOC+11 - Entladeort	2019-03-20	2.5 - 2019	131 SG22 LOC *SG11#2\SG19#1\SG22#1* Place of discharge Place of discharge
152	Code changed GAVI24 --> GAVI25	2019-06-28	2.5	03 UNH S009 0057 Message header
153	Code changed GAVI23 --> GAVI24	2018-12-31	2.4	03 UNH S009 0057 Message header
154	2018-014 neu / new	2018-12-18	2.4	04 BGM C106 1056 Beginning of message

COPYRIGHT VDA 2026

List of changes

No.	Change Change Request	Date	Version	Segment(-group) and data element
155	2018-001-VDA Neu / new	2018-06-28	2.3	18 SG1 RFF *SG1#5* Access code at pick-up, assigned by the shipping point (ship-from-party) Access code at pick-up, assigned by the shipping point (ship-from-party)
156	2018-002 RFF+AGK hinzugefügt / added	2018-06	2.3	15 SG1 RFF *SG1#2* Transport reference of the transport orderer Transport reference of ship-from
157	2018-001-VDA AAK geändert/changed to AKT	2018-05	2.3	19 SG1 RFF C506 1153 *SG1#6* Reference to the original transport order to be replaced Reference to the original transport order to be replaced
158	Code changed GAVI22 --> GAVI23	2018-04-16	2.3	03 UNH S009 0057 Message header
159	BMW 2018-001 new segment	2018-03-13	2.3	128 SG21 QTY *SG11#2\SG19#1\SG21#1* Dangerous goods information Quantity of the hazardous substance summarily contained in the delivery quantity
160	BMW 2018-001 Code 205 ergänzt / added	2018-03-13	2.3	06 DTM C507 2379 Requested shipment or delivery date
161	MEA+ABU hinzugefügt/added.	2017-10-18	2.3	103 SG12 MEA *SG11#2\SG12#1* Group of inner packaging items Maximum stackability for transport purposes
162	MEA+ABU hinzugefügt/added.	2017-10-18	2.3	83 SG12 MEA *SG11#1\SG12#1* Handling unit group details Maximum stackability for transport purposes
163	Korrektur Code CMT --> MMT	2017-10-08	2.2	101 SG12 MEA C174 6411 *SG11#2\SG12#1* Group of inner packaging items Height
164	Korrektur Code CMT --> MMT	2017-10-08	2.2	100 SG12 MEA C174 6411 *SG11#2\SG12#1* Group of inner packaging items Width
165	Korrektur Format an..35 --> an..12	2017-10-07	2.2	08 DTM C507 2380 Date/time/period
166	Harmonisierung mit VDA 4933 T2 und VDA 4987 Eingefügt/added DE 4440#5	2017-09-05	2.2	129 SG21 FTX C108 4440 *SG11#2\SG19#1\SG21#1* Dangerous goods information Dangerous goods description

COPYRIGHT VDA 2026

List of changes

No.	Change Change Request	Date	Version	Segment(-group) and data element
167	Harmonisierung mit VDA 4933 T2 und VDA 4987 Eingefügt/added DE 4440#4	2017-09-05	2.2	129 SG21 FTX C108 4440 *SG11#2\SG19#1\SG21#1* Dangerous goods information Dangerous goods description
168	Harmonisierung mit VDA 4933 T2 und VDA 4987 Eingefügt/added DE 4440#3	2017-09-05	2.2	129 SG21 FTX C108 4440 *SG11#2\SG19#1\SG21#1* Dangerous goods information Dangerous goods description
169	Harmonisierung mit VDA 4933 T2 und VDA 4987 an..128 --> an..256	2017-09-05	2.2	129 SG21 FTX C108 4440 *SG11#2\SG19#1\SG21#1* Dangerous goods information Dangerous goods description
170	Harmonisierung mit VDA 4933 T2 und VDA 4987 an..128 --> an..256	2017-09-05	2.2	129 SG21 FTX C108 4440 *SG11#2\SG19#1\SG21#1* Dangerous goods information Dangerous goods description
171	Harmonisierung mit VDA 4933 T2 Eingefügt: C223 mit 7106 und 6411 added C223.	2017-09-05	2.2	127 SG21 DGS C223 *SG11#2\SG19#1\SG21#1* Dangerous goods information Dangerous goods
172	VDA AK KIT, Harmonisierung mit VDA 4987 neu / new enabled	2017-09-05	2.2	108 SG16 GIN C208 7402 *SG11#2\SG12#1\SG14#1\SG16#1* Label number(s) Label IDs
173	VDA AK KIT, Harmonisierung mit VDA 4987 neu / new enabled	2017-09-05	2.2	108 SG16 GIN C208 7402 *SG11#2\SG12#1\SG14#1\SG16#1* Label number(s) Label IDs
174	VDA AK KIT, Harmonisierung mit VDA 4987 neu / new enabled	2017-09-05	2.2	108 SG16 GIN C208 7402 *SG11#2\SG12#1\SG14#1\SG16#1* Label number(s) Label IDs
175	VDA AK KIT, Harmonisierung mit VDA 4987 neu / new enabled	2017-09-05	2.2	108 SG16 GIN C208 7402 *SG11#2\SG12#1\SG14#1\SG16#1* Label number(s) Label IDs
176	VDA AK KIT, Harmonisierung mit VDA 4987 neu / new enabled	2017-09-05	2.2	108 SG16 GIN C208 7402 *SG11#2\SG12#1\SG14#1\SG16#1* Label number(s) Label IDs
177	VDA AK KIT, Harmonisierung mit VDA 4987 neu / new enabled	2017-09-05	2.2	108 SG16 GIN C208 7402 *SG11#2\SG12#1\SG14#1\SG16#1* Label number(s) Label IDs

COPYRIGHT VDA 2026

List of changes

No.	Change Change Request	Date	Version	Segment(-group) and data element
178	VDA AK KIT, Harmonisierung mit VDA 4987 neu / new enabled	2017-09-05	2.2	108 SG16 GIN C208 7402 *SG11#2\SG12#1\SG14#1\SG16#1* Label number(s) Label IDs
179	VDA AK KIT, Harmonisierung mit VDA 4987 neu / new enabled	2017-09-05	2.2	108 SG16 GIN C208 7402 *SG11#2\SG12#1\SG14#1\SG16#1* Label number(s) Label IDs
180	Sitzung AK KIT Aktivierung der DEG C208#2 bis C208#5. DEG DEG C208#2 to C208#5 enabled	2017-09-05	2.2	108 SG16 GIN *SG11#2\SG12#1\SG14#1\SG16#1* Label number(s) Label IDs
181	VDA AK KIT, Harmonisierung mit VDA 4987 und 4933 T2. Code 10, 60, 70, 80 eingefügt/added. Code 23 gelöscht/deleted.	2017-09-05	2.2	61 SG6 TDT C220 8067 *SG6#1* Means of transport Transport information
182	VDA AK KIT FTX+AVB gelöscht, da Inhalte jetzt in der HAN-Segmentgruppe übermittelt werden. FTX+AVB deleted, use HAN segment.	2017-09-05	2.2	58 SG5 TOD *SG5#1* Terms of delivery Terms of delivery or transport
183	Segmente gelöscht / segments deleted: MEA+AAX+AAD+KGM:9' MEA+AAX+AAL+KGM:9' MEA+AAX+ABJ+MTQ:9'	2017-08-03	2.2	04 BGM Beginning of message
184	Harmonisierung Remark hinzugefügt: Die Liste enthaält auch Codes, die in den INCOTETRMS 2010 nicht mehr enthalten sind, da sie noch häufig in der Praxis benutzt werden.	2017-08	2.2	58 SG5 TOD C100 4053 *SG5#1* Terms of delivery Terms of delivery or transport
185	Harmonisierung Codes hinzugefügt/added: DAP, DAT, FOA, FOR.	2017-08	2.2	58 SG5 TOD C100 4053 *SG5#1* Terms of delivery Terms of delivery or transport
186	Gelöscht/ deleted: MEA+AAZ+T - Taragewicht.	2017-05	2.2	77 SG12 PAC *SG11#1\SG12#1* Handling unit group details Package
187	Meeting Codes eingefügt/added: A, B, C, D, P, S.	2017-05	2.2	60 SG5 FTX C107 4441 *SG5#1* Terms of delivery Terms of delivery - descriptive text
188	Korrektur Status N --> O	2017-05	2.2	59 SG5 LOC C517 3225 *SG5#1* Terms of delivery Incoterms place

COPYRIGHT VDA 2026

List of changes

No.	Change Change Request	Date	Version	Segment(-group) and data element
189	Korrektur Status C --> R	2017-05	2.2	59 SG5 LOC C517 *SG5#1* Terms of delivery Incoterms place
190	Korrektur MaxRep 99 --> 1	2017-05	2.2	SG2 Transport ordering party
191	Segment neu eingefügt/segment added	2017-05	2.2	17 SG1 RFF *SG1#4* Transport chain reference Transport chain reference
192	LOC+13 - Umschlagspunkt gelöscht. / deleted	2017-04-12	2.2	32 SG2 NAD *SG2#2* Ship to ShipTo's name and address
193	Kommentar geändert / comment changed Das Datum zu dem die Waren versendet werden oder versendet werden sollen. --> Geforderter Abhol- oder Soll-Wareneingangstermin Date/time on which the goods are or are expected to be despatched or shipped. --> Geforderter Abhol- oder Soll-Wareneingangstermin	2017-04-12	2.2	06 DTM C507 2380 Requested shipment or delivery date
194	Harmonisierung Code 2 hinzugefügt / added	2017-04-12	2.2	06 DTM C507 2005 Requested shipment or delivery date
195	Name geändert / name changed Versand- / Abholtermin, gefordert --> Geforderter Abhol- oder Soll-Wareneingangstermin Requested shipment date --> Geforderter Abhol- oder Soll-Wareneingangstermin MaxRep 1 --> 2	2017-04-12	2.2	06 DTM Requested shipment or delivery date
196	Code changed GAVI21 --> GAVI22	2017-03-21	2.2	03 UNH S009 0057 Message header
197	VDA4933-CR001 FTX+OSI hinzugefügt/added.	2017-03-08	2.2	75 SG9 FTX *SG8#1\SG9#1* Information for the freight forwarder Other service information
198	VDA4933-CR001 FTX+SIC hinzugefügt/added.	2017-03-08	2.2	74 SG9 FTX *SG8#1\SG9#1* Information for the freight forwarder Consignment documentary instruction as free text
199	VDA4933-CR001 HAN hinzugefügt/added.	2017-03-08	2.2	73 SG9 HAN *SG8#1\SG9#1* Information for the freight forwarder Handling instructions

COPYRIGHT VDA 2026

List of changes

No.	Change Change Request	Date	Version	Segment(-group) and data element
200	VDA4933-CR001 EQD hinzugefügt/ added	2017-03-08	2.2	72 SG8 EQD *SG8#1* Information for the freight forwarder Equipment details
201	VDA4933-CR001 Code 92 hinzugefügt/added	2017-03-08	2.2	52 SG2 NAD C082 3055 *SG2#6* Transport ordering party Transport ordering party - name and address
202	VDA4933-CR001 Code 16, 92 hinzugefügt/ added	2017-03-08	2.2	23 SG2 LOC C517 3055 *SG2#1* Ship from Shipping location/ Place of loading
203	Harmonisierung Code 11 --> 10	2017-03-08	2.2	06 DTM C507 2005 Requested shipment or delivery date
204	VDA4933-CR001 Code 15 hinzugefügt/ added.	2017-03-08	2.2	04 BGM 1225 Beginning of message
205	Abgleich RFF-Segmentgruppen/ harmonisation : AAO, AAS, AVU , AAN, PK gelöscht / deleted, DTM+171 gelöscht / deleted.	2017-01-02	2.2	17 SG1 RFF *SG1#4* Transport chain reference Transport chain reference
206	MaxRep 9999 -> 1	2016-04-27	2.1	SG12 Group of inner packaging items
207	MaxRep 9999 -> 1	2016-04-27	2.1	SG12 Handling unit group details
208	2021-018 Anpassung an S3 konformen Profil der EDIFACT S4 (ISO 9735 Part 11). / Adaptation to S3 compliant profile of EDIFACT S4 (ISO 9735 Part 11).	2022-01-20	2.0	01 UNA Service string advice
209	neue Segmentgruppe / new segment group	2015-12-01	2.0	52 SG2 NAD *SG2#6* Transport ordering party Transport ordering party - name and address
210	2015-006 neues Segment / new segment	2015-09-30	1.2	98 SG12 MEA *SG11#2\SG12#1* Group of inner packaging items Tare weight
211	2015-006 neues Segment / new segment	2015-09-30	1.2	92 SG17 MEA *SG11#1\SG12#1\SG14#1\SG17#1* Individual handling unit's weights Tare weight
212	2015-001 neu / new enabled	2015-05-25	1.2	108 SG16 GIN C208 7402 *SG11#2\SG12#1\SG14#1\SG16#1* Label number(s) Label IDs

COPYRIGHT VDA 2026

List of changes

No.	Change Change Request	Date	Version	Segment(-group) and data element
213	2015-001 neu zur Übertragung der vollständigen 'License Plate'/ new enabled to transmit the complete license plate information	2015-05-25	1.2	86 SG16 GIN C208 7402 *SG11#1\SG12#1\SG14#1\SG16#1* Individual handling unit's transport label number Individual handling unit's transport label number
214	Code 20 hinzugefügt /added	2014-11-30	1.1	67 SG6 TDT 8051 *SG6#2* Transport details of the main carriage Transport details of the main carriage
215	2014-008 Neue Segmentgruppenvariante / new segment group variant	2014-11-30	1.1	SG6 Transport details of the main carriage
216	RFF+ABT/AGK vereinzelt ohne inhaltliche Änderung.	2019-10-16		15 SG1 RFF *SG1#2* Transport reference of the transport orderer Transport reference of ship-from
217	RFF+ABT/AGK vereinzelt ohne inhaltliche Änderung.	2019-10-16		14 SG1 RFF *SG1#1* The goods declaration number is assigned by the goods declaration office (customs). The goods declaration number is assigned by the goods declaration office (customs).
218	Sitzung 2022-09-14 CR zu stellen von Hella: Löschen --> abgelehnt	2018-05		52 SG2 NAD *SG2#6* Transport ordering party Transport ordering party - name and address

COPYRIGHT VDA 2026

Structure of an UN/EDIFACT interchange

An EDIFACT interchange file contains an interchange frame (UNB-UNZ) with one or more messages (UNH-UNT). The interchange frame can be preceded by a service string advice to define the used separator characters (recommended).

Usually one interchange file contains only messages of the same type, e.g. DESADV

For more information, please refer to recommendation VDA 4900.

Status	Segment		Description
Optional	UNA		Service String Advice
Mandatory	UNB		Interchange header
Mandatory		UNH	1. Message header
		...	Message segments
Mandatory		UNT	1. Message trailer
		UNH	2. Message header
		...	Message segments
		UNT	2. Message trailer
		etc.	
		UNH	n. Message header
		...	Message segments
		UNT	n. Message trailer
Mandatory	UNZ		Interchange trailer

COPYRIGHT VDA 2026

Branchingdiagramm

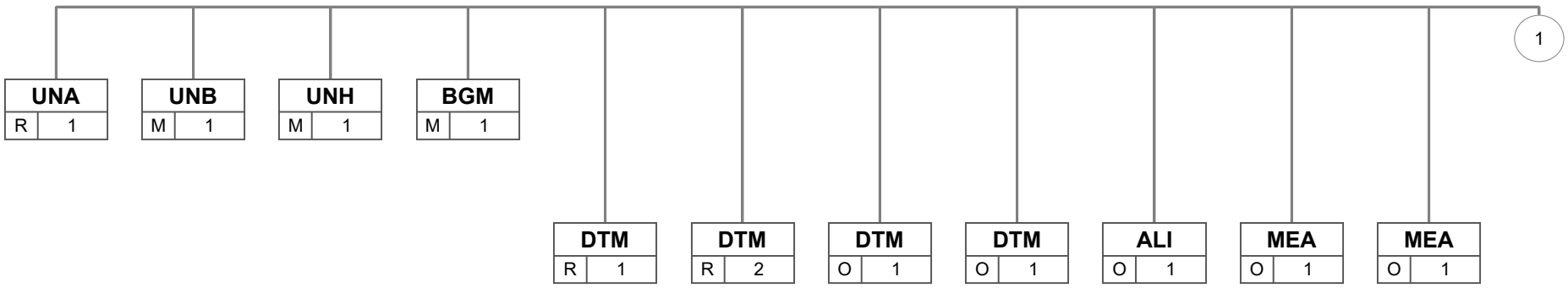

Die schwarzen Segmente/Gruppen werden genutzt, die grauen Segmente/Gruppen sind im Nachrichtentyp enthalten, werden aber nicht genutzt.

Bez
St MaxWdh

Bez = Segment-/Gruppen-Bezeichner, MaxWdh = Maximale Wiederholung der Segmente/Gruppen
St = Status (M=Muss/Mandatory, C=Conditional, R=Erforderlich/Required, O=Optional, D=Abhängig von/Dependent, A=Empfohlen/Advised)

COPYRIGHT VDA 2026

Branchingdiagramm

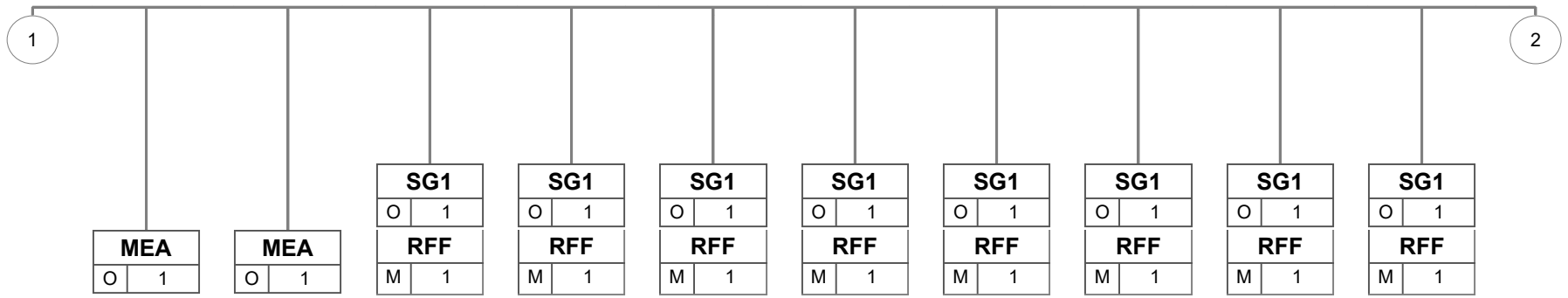

Die schwarzen Segmente/Gruppen werden genutzt, die grauen Segmente/Gruppen sind im Nachrichtentyp enthalten, werden aber nicht genutzt.

Bez
St MaxWdh

Bez = Segment-/Gruppen-Bezeichner, MaxWdh = Maximale Wiederholung der Segmente/Gruppen
St = Status (M=Muss/Mandatory, C=Conditional, R=Erforderlich/Required, O=Optional, D=Abhängig von/Dependent, A=Empfohlen/Advised)

COPYRIGHT VDA 2026

Branchingdiagramm

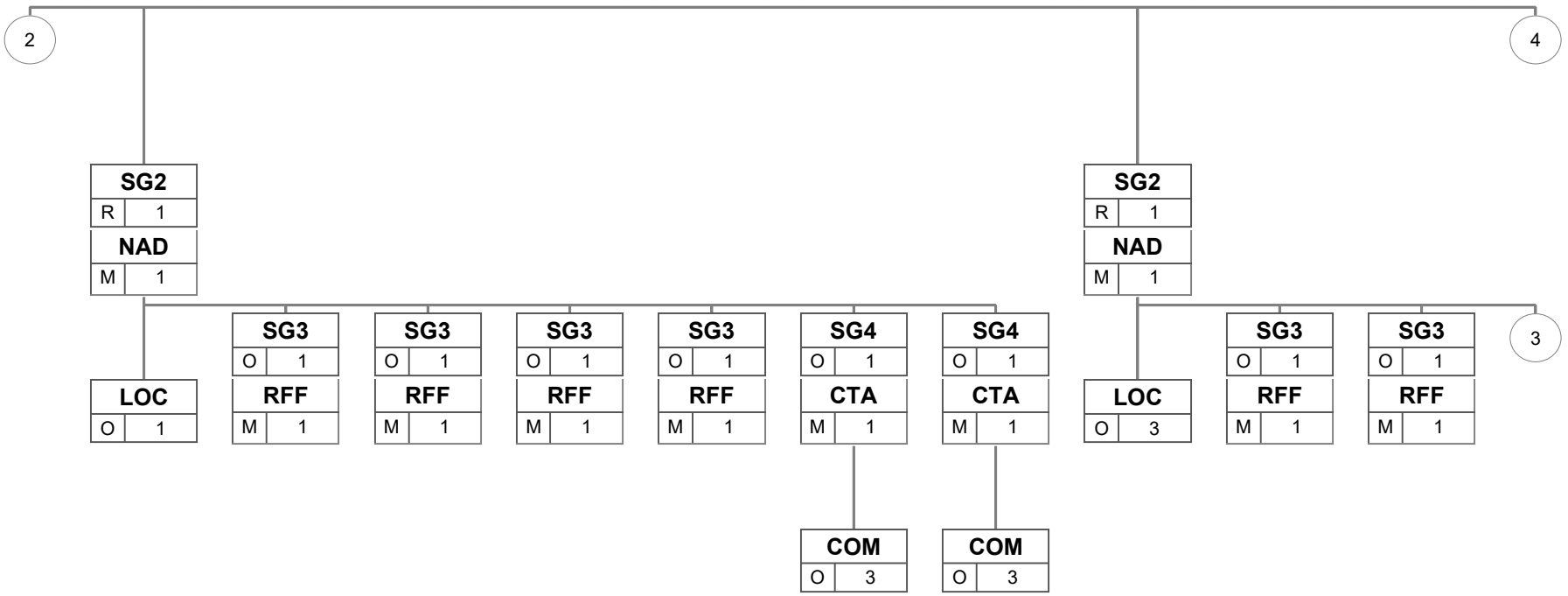

Die schwarzen Segmente/Gruppen werden genutzt, die grauen Segmente/Gruppen sind im Nachrichtentyp enthalten, werden aber nicht genutzt.

Bez
St MaxWdh

Bez = Segment-/Gruppen-Bezeichner, MaxWdh = Maximale Wiederholung der Segmente/Gruppen
St = Status (M=Muss/Mandatory, C=Conditional, R=Erforderlich/Required, O=Optional, D=Abhängig von/Dependent, A=Empfohlen/Advised)

COPYRIGHT VDA 2026

Branchingdiagramm

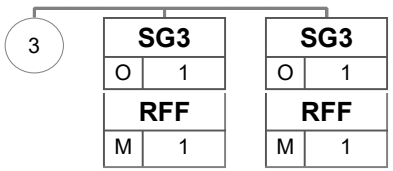

Die schwarzen Segmente/Gruppen werden genutzt, die grauen Segmente/Gruppen sind im Nachrichtentyp enthalten, werden aber nicht genutzt.

Bez
St MaxWdh

Bez = Segment-/Gruppen-Bezeichner, MaxWdh = Maximale Wiederholung der Segmente/Gruppen
St = Status (M=Muss/Mandatory, C=Conditional, R=Erforderlich/Required, O=Optional, D=Abhängig von/Dependent, A=Empfohlen/Advised)

COPYRIGHT VDA 2026

Branchingdiagramm

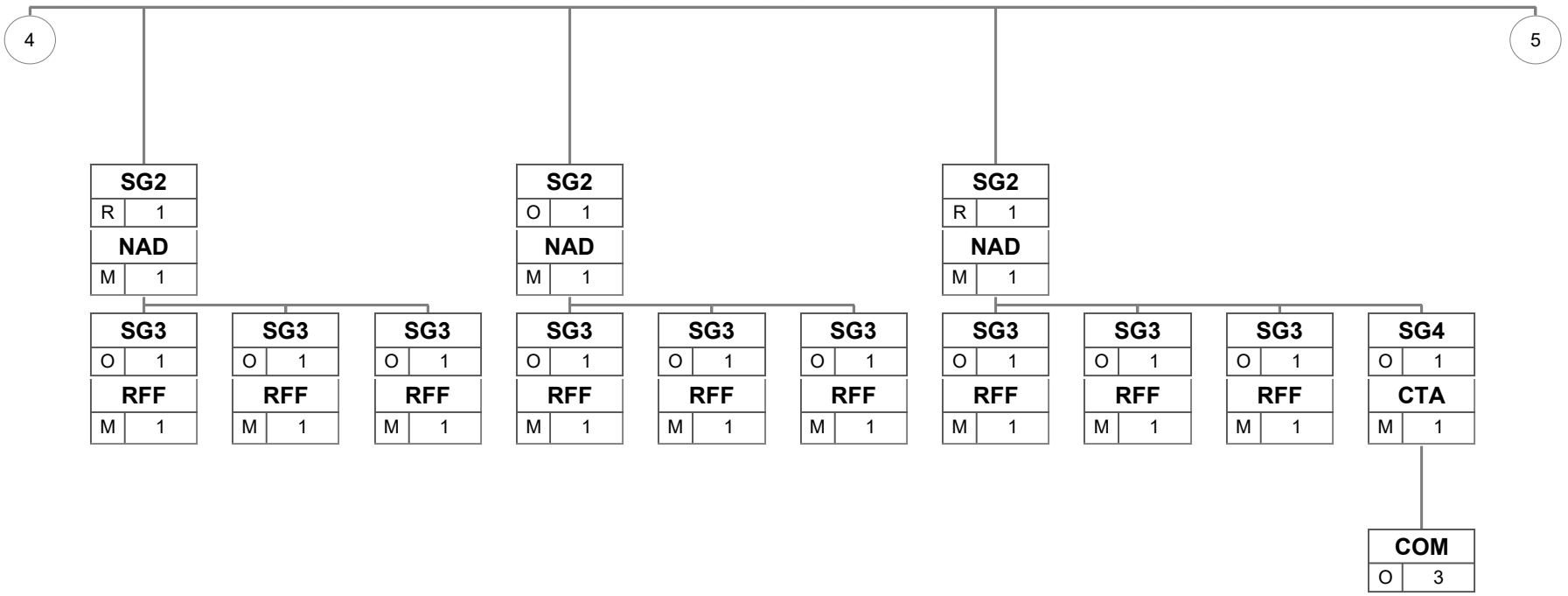

Die schwarzen Segmente/Gruppen werden genutzt, die grauen Segmente/Gruppen sind im Nachrichtentyp enthalten, werden aber nicht genutzt.

Bez
St MaxWdh

Bez = Segment-/Gruppen-Bezeichner, MaxWdh = Maximale Wiederholung der Segmente/Gruppen
St = Status (M=Muss/Mandatory, C=Conditional, R=Erforderlich/Required, O=Optional, D=Abhängig von/Dependent, A=Empfohlen/Advised)

COPYRIGHT VDA 2026

Branchingdiagramm

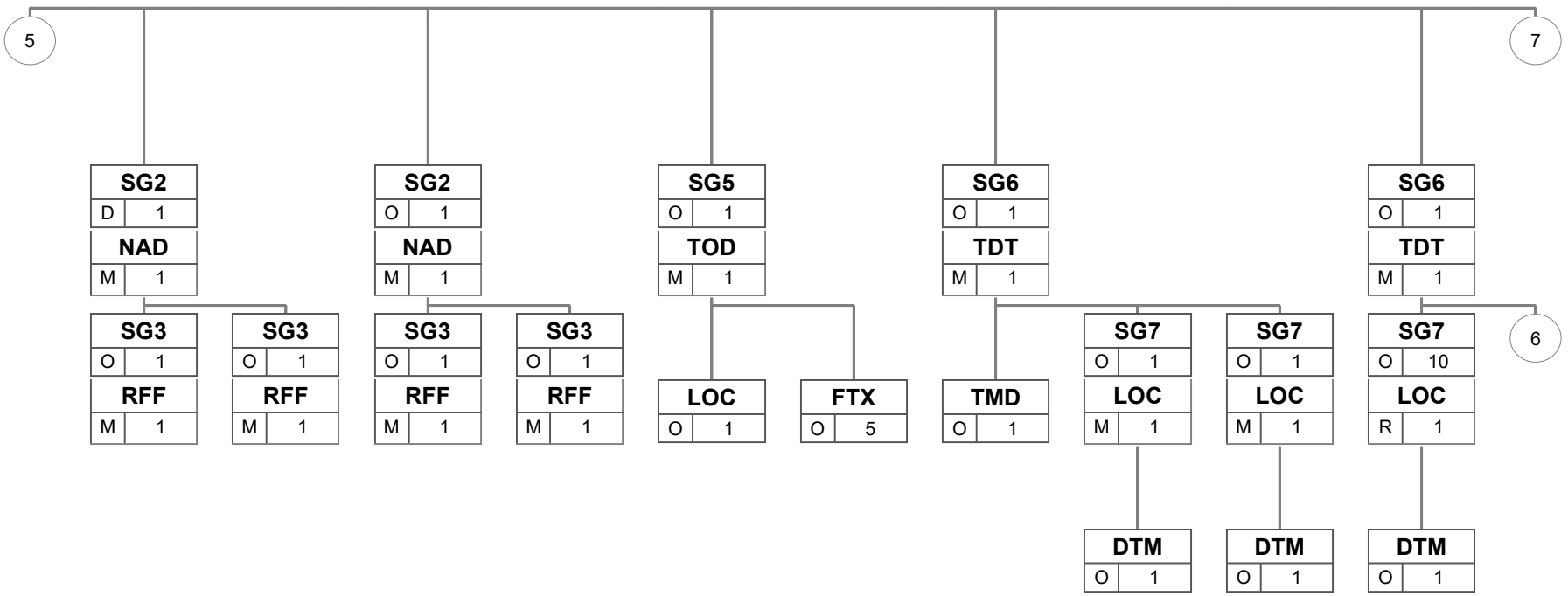

Die schwarzen Segmente/Gruppen werden genutzt, die grauen Segmente/Gruppen sind im Nachrichtentyp enthalten, werden aber nicht genutzt.

Bez
St MaxWdh

Bez = Segment-/Gruppen-Bezeichner, MaxWdh = Maximale Wiederholung der Segmente/Gruppen
St = Status (M=Muss/Mandatory, C=Conditional, R=Erforderlich/Required, O=Optional, D=Abhängig von/Dependent, A=Empfohlen/Advised)

COPYRIGHT VDA 2026

Branchingdiagramm

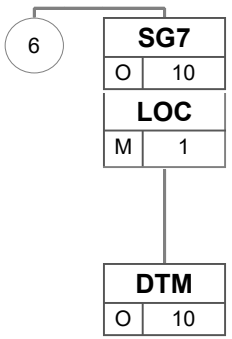

Die schwarzen Segmente/Gruppen werden genutzt, die grauen Segmente/Gruppen sind im Nachrichtentyp enthalten, werden aber nicht genutzt.

Bez
St MaxWdh

Bez = Segment-/Gruppen-Bezeichner, MaxWdh = Maximale Wiederholung der Segmente/Gruppen
St = Status (M=Muss/Mandatory, C=Conditional, R=Erforderlich/Required, O=Optional, D=Abhängig von/Dependent, A=Empfohlen/Advised)

COPYRIGHT VDA 2026

Branchingdiagramm

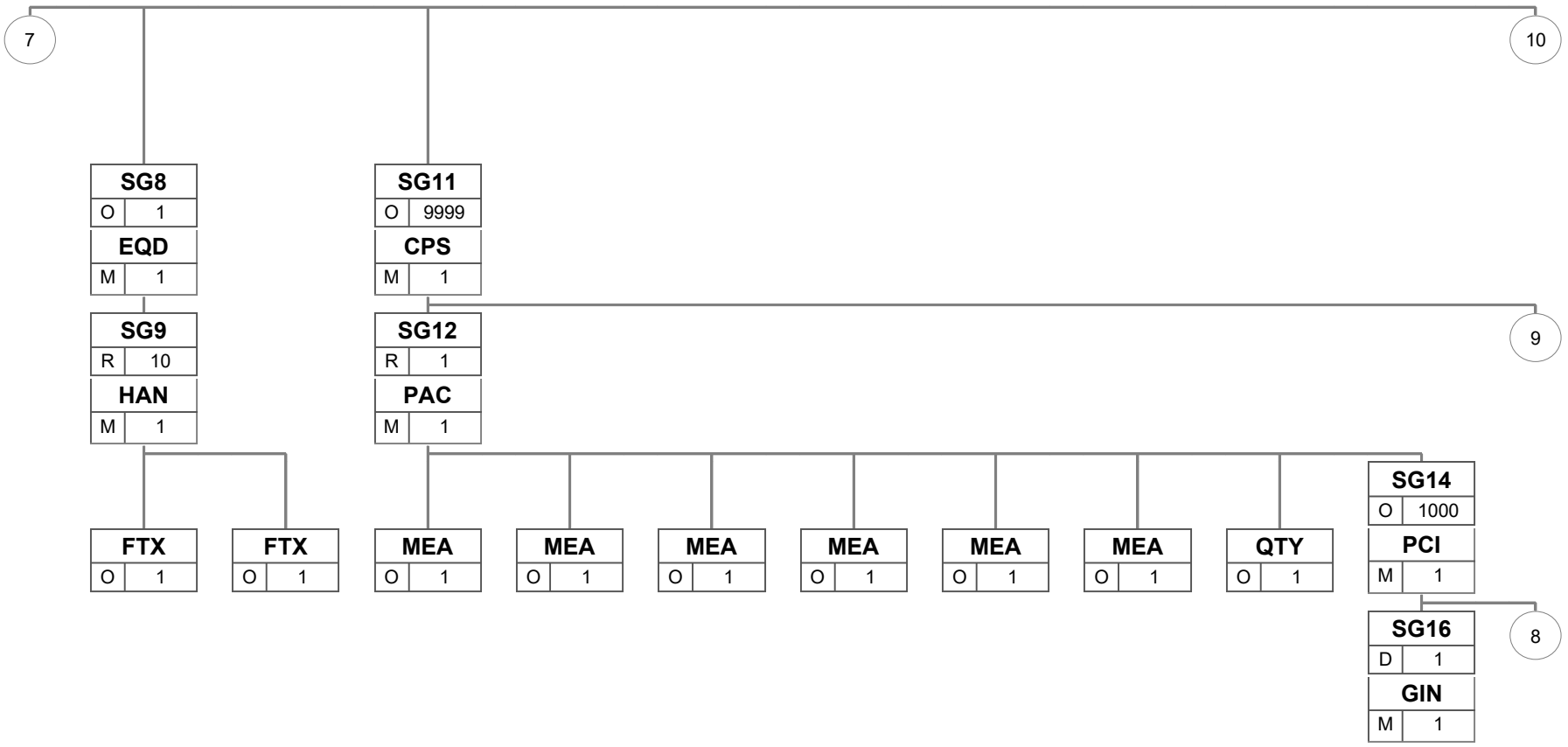

Die schwarzen Segmente/Gruppen werden genutzt, die grauen Segmente/Gruppen sind im Nachrichtentyp enthalten, werden aber nicht genutzt.

Bez
St MaxWdh

Bez = Segment-/Gruppen-Bezeichner, MaxWdh = Maximale Wiederholung der Segmente/Gruppen
St = Status (M=Muss/Mandatory, C=Conditional, R=Erforderlich/Required, O=Optional, D=Abhängig von/Dependent, A=Empfohlen/Advised)

COPYRIGHT VDA 2026

Branchingdiagramm

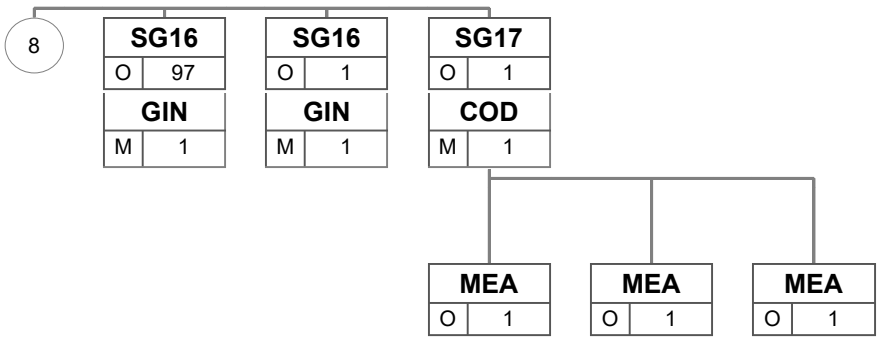

Die schwarzen Segmente/Gruppen werden genutzt, die grauen Segmente/Gruppen sind im Nachrichtentyp enthalten, werden aber nicht genutzt.

Bez
St MaxWdh

Bez = Segment-/Gruppen-Bezeichner, MaxWdh = Maximale Wiederholung der Segmente/Gruppen
St = Status (M=Muss/Mandatory, C=Conditional, R=Erforderlich/Required, O=Optional, D=Abhängig von/Dependent, A=Empfohlen/Advised)

COPYRIGHT VDA 2026

Branchingdiagramm

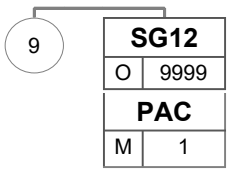

Die schwarzen Segmente/Gruppen werden genutzt, die grauen Segmente/Gruppen sind im Nachrichtentyp enthalten, werden aber nicht genutzt.

Bez
St MaxWdh

Bez = Segment-/Gruppen-Bezeichner, MaxWdh = Maximale Wiederholung der Segmente/Gruppen
St = Status (M=Muss/Mandatory, C=Conditional, R=Erforderlich/Required, O=Optional, D=Abhängig von/Dependent, A=Empfohlen/Advised)

COPYRIGHT VDA 2026

Branchingdiagramm

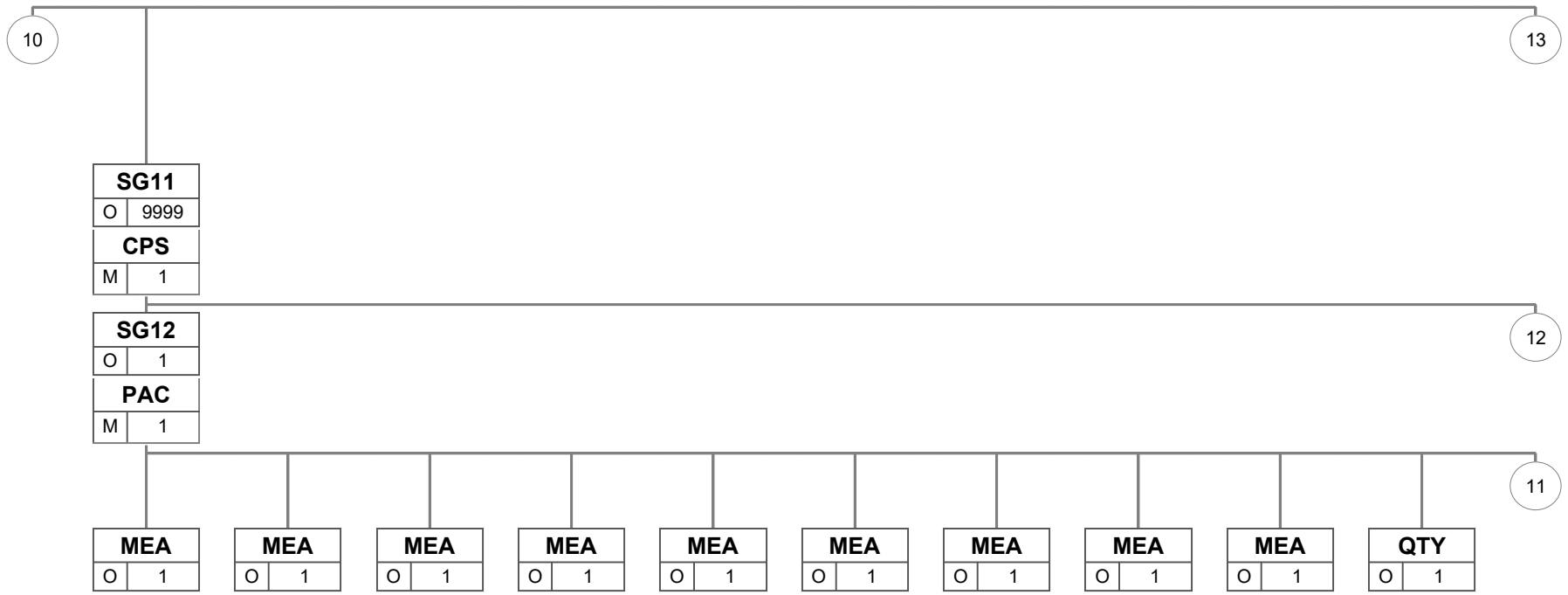

Die schwarzen Segmente/Gruppen werden genutzt, die grauen Segmente/Gruppen sind im Nachrichtentyp enthalten, werden aber nicht genutzt.

Bez
St MaxWdh

Bez = Segment-/Gruppen-Bezeichner, MaxWdh = Maximale Wiederholung der Segmente/Gruppen
St = Status (M=Muss/Mandatory, C=Conditional, R=Erforderlich/Required, O=Optional, D=Abhängig von/Dependent, A=Empfohlen/Advised)

COPYRIGHT VDA 2026

Branchingdiagramm

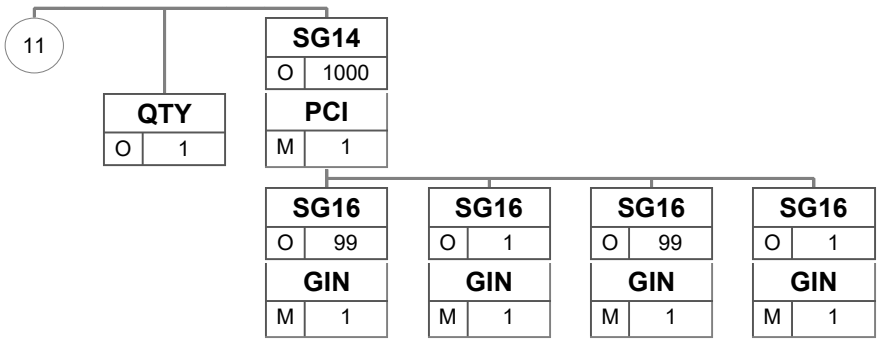

Die schwarzen Segmente/Gruppen werden genutzt, die grauen Segmente/Gruppen sind im Nachrichtentyp enthalten, werden aber nicht genutzt.

Bez
St MaxWdh

Bez = Segment-/Gruppen-Bezeichner, MaxWdh = Maximale Wiederholung der Segmente/Gruppen
St = Status (M=Muss/Mandatory, C=Conditional, R=Erforderlich/Required, O=Optional, D=Abhängig von/Dependent, A=Empfohlen/Advised)

COPYRIGHT VDA 2026

Branchingdiagramm

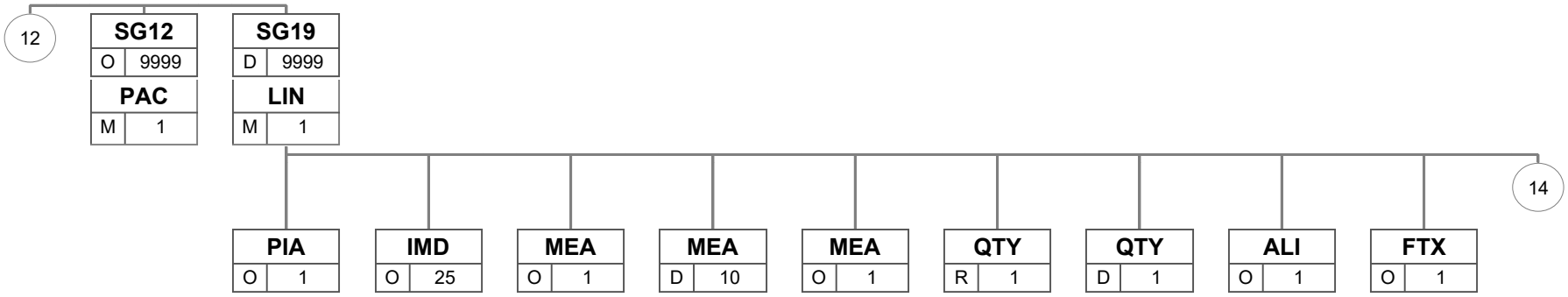

Die schwarzen Segmente/Gruppen werden genutzt, die grauen Segmente/Gruppen sind im Nachrichtentyp enthalten, werden aber nicht genutzt.

Bez
St MaxWdh

Bez = Segment-/Gruppen-Bezeichner, MaxWdh = Maximale Wiederholung der Segmente/Gruppen
St = Status (M=Muss/Mandatory, C=Conditional, R=Erforderlich/Required, O=Optional, D=Abhängig von/Dependent, A=Empfohlen/Advised)

COPYRIGHT VDA 2026

Branchingdiagramm

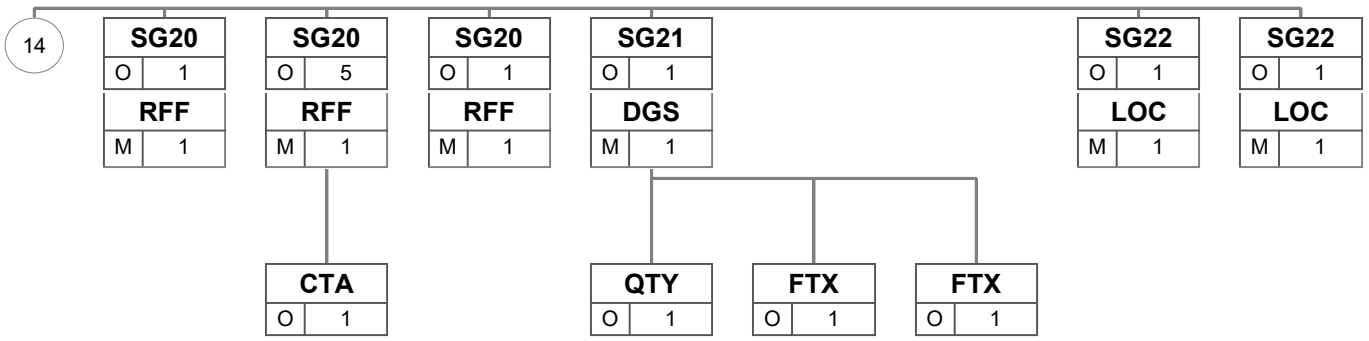

Die schwarzen Segmente/Gruppen werden genutzt, die grauen Segmente/Gruppen sind im Nachrichtentyp enthalten, werden aber nicht genutzt.

Bez
St MaxWdh

Bez = Segment-/Gruppen-Bezeichner, MaxWdh = Maximale Wiederholung der Segmente/Gruppen
St = Status (M=Muss/Mandatory, C=Conditional, R=Erforderlich/Required, O=Optional, D=Abhängig von/Dependent, A=Empfohlen/Advised)

COPYRIGHT VDA 2026

Branchingdiagramm

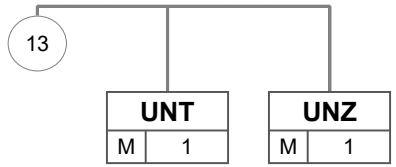

Die schwarzen Segmente/Gruppen werden genutzt, die grauen Segmente/Gruppen sind im Nachrichtentyp enthalten, werden aber nicht genutzt.

Bez	
St	MaxWdh

Bez = Segment-/Gruppen-Bezeichner, MaxWdh = Maximale Wiederholung der Segmente/Gruppen
St = Status (M=Muss/Mandatory, C=Conditional, R=Erforderlich/Required, O=Optional, D=Abhängig von/Dependent, A=Empfohlen/Advised)

COPYRIGHT VDA 2026

Structure / content

No.	Tag	St	MaxRep	Content
1	**UNA**	R	1	Service string advice
2	**UNB**	M	1	Interchange header
3	**UNH**	M	1	Message header
4	**BGM**	M	1	Beginning of message
5	**DTM**	R	1	Message date
6	**DTM**	R	2	Requested shipment or delivery date
7	**DTM**	O	1	Estimated arrival date
8	**DTM**	O	1	Date/time/period
9	**ALI**	O	1	Relevant to DeCA
10	**MEA**	O	1	Consignment's gross weight
11	**MEA**	O	1	Total loading meter of the transport
12	**MEA**	O	1	Consignment's loading meters
13	**MEA**	O	1	Number of handling units in shipment
	SG1	O	1	The goods declaration number is assigned by the goods declaration office (customs).
14	**RFF**	M	1	The goods declaration number is assigned by the goods declaration office (customs).
	SG1	O	1	Transport reference of the transport orderer
15	**RFF**	M	1	Transport reference of ship-from
	SG1	O	1	Conveyance reference number / Shipment number
16	**RFF**	M	1	Conveyance reference number
	SG1	O	1	Transport chain reference
17	**RFF**	M	1	Transport chain reference
	SG1	O	1	Access code at pick-up, assigned by the shipping point (ship-from-party)
18	**RFF**	M	1	Access code at pick-up, assigned by the shipping point (ship-from-party)
	SG1	O	1	Reference to the original transport order to be replaced
19	**RFF**	M	1	Reference to the original transport order to be replaced
	SG1	O	1	Pick-up sheet number
20	**RFF**	M	1	Pick-up sheet number
	SG1	O	1	Subset ID
21	**RFF**	M	1	Subset ID
	SG2	R	1	Ship from
22	**NAD**	M	1	Ship from
23	**LOC**	O	1	Shipping location/ Place of loading
	SG3	O	1	Additional Party ID (DUNS)
24	**RFF**	M	1	Reference
	SG3	O	1	Additional party ID - plant number
25	**RFF**	M	1	Additional party ID - plant number
	SG3	O	1	Fiscal number
26	**RFF**	M	1	Fiscal number
	SG3	O	1	VAT registration number
27	**RFF**	M	1	VAT registration number
	SG4	O	1	Expedition contact
28	**CTA**	M	1	Expedition contact
29	**COM**	O	3	Communication contact
	SG4	O	1	Information contact
30	**CTA**	M	1	Information contact
31	**COM**	O	3	Communication contact
	SG2	R	1	Ship to
32	**NAD**	M	1	ShipTo's name and address

Tag = Tag; No. = consecutive segment number in the guide; MaxRep = maximum repitition; St = status (M=mandatory, C=conditional, R=required, O=optional, D=dependent, A=advised)

COPYRIGHT VDA 2026

Structure / content

No.	Tag	St	MaxRep	Content
33	**LOC**	O	3	Place of discharge
	SG3	O	1	Additional Party ID (DUNS)
34	**RFF**	M	1	Reference
	SG3	O	1	Fiscal number
35	**RFF**	M	1	Fiscal number
	SG3	O	1	Additional party ID - plant number
36	**RFF**	M	1	Additional party ID - plant number
	SG3	O	1	VAT registration number
37	**RFF**	M	1	VAT registration number
	SG2	R	1	Buyer
38	**NAD**	M	1	Buyer's name and address
	SG3	O	1	Additional Party ID (DUNS)
39	**RFF**	M	1	Reference
	SG3	O	1	Fiscal number
40	**RFF**	M	1	Fiscal number
	SG3	O	1	VAT registration number
41	**RFF**	M	1	VAT registration number
	SG2	O	1	Seller / Supplier
42	**NAD**	M	1	Seller's name and address
	SG3	O	1	Additional Party ID (DUNS)
43	**RFF**	M	1	Reference
	SG3	O	1	Fiscal number
44	**RFF**	M	1	Fiscal number
	SG3	O	1	VAT registration number
45	**RFF**	M	1	VAT registration number
	SG2	R	1	Freight forwarder
46	**NAD**	M	1	Freight forwarder's name and address
	SG3	O	1	Additional Party ID (DUNS)
47	**RFF**	M	1	Reference
	SG3	O	1	Fiscal number
48	**RFF**	M	1	Fiscal number
	SG3	O	1	VAT registration number
49	**RFF**	M	1	VAT registration number
	SG4	O	1	Information contact
50	**CTA**	M	1	Information contact
51	**COM**	O	3	Communication contact
	SG2	D	1	Transport ordering party
52	**NAD**	M	1	Transport ordering party - name and address
	SG3	O	1	Fiscal number
53	**RFF**	M	1	Fiscal number
	SG3	O	1	VAT registration number
54	**RFF**	M	1	VAT registration number
	SG2	O	1	Ultimate Customer Party
55	**NAD**	M	1	Ultimate customers's name and address
	SG3	O	1	Fiscal number
56	**RFF**	M	1	Fiscal number
	SG3	O	1	VAT registration number

Tag = Tag; No. = consecutive segment number in the guide; MaxRep = maximum repitition; St = status (M=mandatory, C=conditional, R=required, O=optional, D=dependent, A=advised)

COPYRIGHT VDA 2026

Structure / content

No.	Tag	St	MaxRep	Content
57	**RFF**	M	1	VAT registration number
	SG5	O	1	Terms of delivery
58	**TOD**	M	1	Terms of delivery or transport
59	**LOC**	O	1	Incoterms place
60	**FTX**	O	5	Terms of delivery - descriptive text
	SG6	O	1	Means of transport
61	**TDT**	M	1	Transport information
62	**TMD**	O	1	Transport movement type
	SG7	O	1	Place of departure
63	**LOC**	M	1	Current place of departure
64	**DTM**	O	1	Required departure date and time for this transport leg
	SG7	O	1	Place of arrival
65	**LOC**	M	1	Current place of arrival
66	**DTM**	O	1	Required arrival date and time for this transport leg
	SG6	O	1	Transport details of the main carriage
67	**TDT**	M	1	Transport details of the main carriage
	SG7	O	10	Place of departure
68	**LOC**	R	1	Current place of departure
69	**DTM**	O	1	Departure date and time
	SG7	O	10	Place of arrival
70	**LOC**	M	1	Current place of arrival
71	**DTM**	O	10	Arrivaldate and time
	SG8	O	1	Information for the freight forwarder
72	**EQD**	M	1	Equipment details
	SG9	R	10	Information for the freight forwarder
73	**HAN**	M	1	Handling instructions
74	**FTX**	O	1	Consignment documentary instruction as free text
75	**FTX**	O	1	Other service information
	SG11	O	9999	Despatch control line / List of handling unit groups
76	**CPS**	M	1	Consignment packing sequence
	SG12	R	1	Handling unit group details
77	**PAC**	M	1	Package
78	**MEA**	O	1	Length
79	**MEA**	O	1	Width
80	**MEA**	O	1	Height
81	**MEA**	O	1	Volume
82	**MEA**	O	1	Maximum stacking weight
83	**MEA**	O	1	Maximum stackability for transport purposes
84	**QTY**	O	1	Maximum stackability
	SG14	O	1000	List of individual handling units
85	**PCI**	M	1	Handling unit label type
	SG16	D	1	Individual handling unit's transport label number
86	**GIN**	M	1	Individual handling unit's transport label number
	SG16	O	97	Individual handling unit's label numbers
87	**GIN**	M	1	List of contained packaging items
	SG16	O	1	Package identification, assigned by the logistics service provider
88	**GIN**	M	1	Package identification, assigned by the logistics service provider
	SG17	O	1	Individual handling unit's weights

Tag = Tag; No. = consecutive segment number in the guide; MaxRep = maximum repitition; St = status (M=mandatory, C=conditional, R=required, O=optional, D=dependent, A=advised)

COPYRIGHT VDA 2026

Structure / content

No.	Tag	St	MaxRep	Content
89	**COD**	M	1	Trigger segment
90	**MEA**	O	1	Gross weight
91	**MEA**	O	1	Net weight
92	**MEA**	O	1	Tare weight
	SG12	O	9999	Packaging aid
93	**PAC**	M	1	Package
	SG11	O	9999	Despatch control line / group of inner packaging items and article line
94	**CPS**	M	1	Consignment packing sequence
	SG12	O	1	Group of inner packaging items
95	**PAC**	M	1	Package
96	**MEA**	O	1	Gross weight of the inner packaging item
97	**MEA**	O	1	Net weight of the (individual) packaging item
98	**MEA**	O	1	Tare weight
99	**MEA**	O	1	Length
100	**MEA**	O	1	Width
101	**MEA**	O	1	Height
102	**MEA**	O	1	Package volume
103	**MEA**	O	1	Maximum stackability for transport purposes
104	**MEA**	O	1	Maximum stacking weight
105	**QTY**	O	1	Actual quantity per package
106	**QTY**	O	1	Maximum stackability
	SG14	O	1000	Individual packaging item
107	**PCI**	M	1	Package identification
	SG16	O	99	Label number(s)
108	**GIN**	M	1	Label IDs
	SG16	O	1	Kanban card number
109	**GIN**	M	1	Kanban card number
	SG16	O	99	Buyer's package ID
110	**GIN**	M	1	Customer assigned package ID
	SG16	O	1	Package identification, assigned by the logistics service provider
111	**GIN**	M	1	Package identification, assigned by the logistics service provider
	SG12	O	9999	Packaging aid
112	**PAC**	M	1	Package
	SG19	D	9999	Article and Despatched Article
113	**LIN**	M	1	Line item
114	**PIA**	O	1	Additional product id
115	**IMD**	O	25	Item description
116	**MEA**	O	1	Net weight of the product
117	**MEA**	D	10	Measurements
118	**MEA**	O	1	Net explosive mass
119	**QTY**	R	1	Despatched quantity
120	**QTY**	D	1	Quantity to be delivered
121	**ALI**	O	1	Country of origin, duty regime and nature of transaction
122	**FTX**	O	1	Article long description
	SG20	O	1	Shipment / Delivery note reference
123	**RFF**	M	1	Shipment / Delivery note reference
	SG20	O	5	Delivery instruction / schedule reference and item related contact information
124	**RFF**	M	1	Delivery instruction / schedule reference

Tag = Tag; No. = consecutive segment number in the guide; MaxRep = maximum repitition; St = status (M=mandatory, C=conditional, R=required, O=optional, D=dependent, A=advised)

COPYRIGHT VDA 2026

Structure / content

No.	Tag	St	MaxRep	Content
125	**CTA**	O	1	Dispatcher at customer's site who has issued the order / delivery instruction.
	SG20	O	1	Order reference
126	**RFF**	M	1	Order reference
	SG21	O	1	Dangerous goods information
127	**DGS**	M	1	Dangerous goods
128	**QTY**	O	1	Quantity of the hazardous substance summarily contained in the delivery quantity
129	**FTX**	O	1	Dangerous goods description
130	**FTX**	O	1	Dangerous goods declaration exception
	SG22	O	1	Place of discharge
131	**LOC**	M	1	Place of discharge
	SG22	O	1	Internal place of destination
132	**LOC**	M	1	Internal place of destination
133	**UNT**	M	1	Message trailer
134	**UNZ**	M	1	Interchange trailer

Tag = Tag; No. = consecutive segment number in the guide; MaxRep = maximum repitition; St = status (M=mandatory, C=conditional, R=required, O=optional, D=dependent, A=advised)

COPYRIGHT VDA 2026

Segmente

Nr	Bez	St	MaxWdh	Name
1	UNA	R	1	Service string advice

Standard				Implementierung		
Bez	Name	St	Format	St	Format	Anwendung / Bemerkung
UNA1	Component data element separator	M	an1	M	an1	Colon
UNA2	Data element separator	M	an1	M	an1	Plus sign
UNA3	Decimal notation	M	an1	M	an1	Decimal point or comma This differs from version 4 that only allows decimal point.
UNA4	Release indicator	M	an1	M	an1	Question mark
UNA5	Reserved for future use	M	an1	M	an1	Blank
UNA6	Segment terminator	M	an1	M	an1	Apostrophe

The use of UNA is strongly recommended and UNA5 must be blank.
Beispiel:

```
UNA:+.? '
```

Bez =Bezeichner; Nr = Laufende Segmentnummer im Guide; MaxWdh = Maximale Wiederholung; St = Status (M=Muss/Mandatory, C=Conditional, R=Erforderlich/Required, O=Optional, D=Abhängig von/Dependent, A=Empfohlen/Advised)

COPYRIGHT VDA 2026

Segmente

Nr	Bez	St	MaxWdh	Name
2	UNB	M	1	Interchange header

Standard				Implementierung		
Bez	Name	St	Format	St	Format	Anwendung / Bemerkung
S001	Syntax identifier	M		M		
0001	Syntax identifier	M	a4	M	a4	UNOW shall only be used, if agreed upon by partners in their interchange agreement. **UNOA** UN/ECE level A **UNOB** UN/ECE level B **UNOC** UN/ECE level C **UNOD** UN/ECE level D **UNOW** UN/ECE level W
0002	Syntax version number	M	an1	M	an1	To use syntax version 4 according to the ISO 9735-11 profile, code "X" must be used here. **X** Syntax version 4 ISO 9735-11 profile.
0080	Service code list directory version number	C	an..6	N		Nicht genutzt
0133	Character encoding, coded	C	an..3	N		Nicht genutzt
0076	Syntax release number	C	an2	N		Nicht genutzt
S002	Interchange sender	M		M		
0004	Sender identification	M	an..35	M	an..35	Unique ID of the sender in the data transmission network or system used.
0007	Partner identification code qualifier	C	an..4	O	an..4	Qualifier for the organisation that assigned the identifier, e.g. 59 for Odette.
0008	Address for reverse routing	C	an..14	O	an..14	Address for reverse routing Address of an application or internal system at sender's site to which reply messages should be routed.
0042	Interchange sender internal sub-identification	C	an..35	N		Nicht genutzt
S003	Interchange recipient	M		M		
0010	Recipient identification	M	an..35	M	an..35	Unique ID of the recipient in the data transmission network or system used.
0007	Partner identification code qualifier	C	an..4	O	an..4	
0014	Routing address	C	an..14	O	an..14	Address for reverse routing Address of an application or an internal system at the recipient: For some buyers, the delivery schedules or similar can be generated from different ERP systems. After receipt by the buyer, the messages must then be forwarded to this system and processed there.
0046	Interchange recipient internal sub-identification	C	an..35	N		Nicht genutzt
S004	Date/time of preparation	M		M		
0017	Date of preparation	M	n8	M	n8	Attention: Difference to S3, 8 digits (including century)! Format CCYYMMDD
0019	Time of preparation	M	n4	M	n4	Format hhmm
0020	Interchange control reference	M	an..14	M	an..14	Unique ID of a data transmission.
S005	Recipient's reference, password	C		N		Nicht genutzt
0022	Recipient's reference/password	M	an..14	N		Nicht genutzt
0025	Recipient's reference/password qualifier	C	an2	N		Nicht genutzt
0026	Application reference	C	an..14	N		Nicht genutzt
0029	Processing priority code	C	a1	N		Nicht genutzt
0031	Acknowledgement request	C	n1	N		Nicht genutzt
0032	Communications agreement ID	C	an..35	N		Nicht genutzt

Bez =Bezeichner; Nr = Laufende Segmentnummer im Guide; MaxWdh = Maximale Wiederholung; St = Status (M=Muss/Mandatory, C=Conditional, R=Erforderlich/Required, O=Optional, D=Abhängig von/Dependent, A=Empfohlen/Advised)

COPYRIGHT VDA 2026

Segmente

Standard				Implementierung		
Bez	Name	St	Format	St	Format	Anwendung / Bemerkung
0035	Test indicator	C	n1	O	n1	Only used if the data exchange is for test purposes. This data element is not transmitted for valid transmissions. **1** Interchange is a test

The structure of the EDIFACT interchange and the specification of the service segments for electronic data exchange used in the automotive industry are described in detail in the VDA Recommendation 4900.
Due to the change in ISO standard 9735, VDA-EDIFACT recommendations will be based on the EDIFACT Syntax 3 compliant profile of EDIFACT Syntax 4 (ISO 9735 Part 11) from 2021-12. The service segments (UNA, UNB, UNH, UNS, UNT, UNZ) were adapted accordingly. The user data segments were not changed.
Beispiel:

```
UNB+UNOC:X+VA13:59:EDI-Outbound+XB05:59:EDI-Inbound+20220721:0719+2022000025++++++1'
```

Bez =Bezeichner; Nr = Laufende Segmentnummer im Guide; MaxWdh = Maximale Wiederholung; St = Status (M=Muss/Mandatory, C=Conditional, R=Erforderlich/Required, O=Optional, D=Abhängig von/Dependent, A=Empfohlen/Advised)

COPYRIGHT VDA 2026

Segmente

Nr	Bez	St	MaxWdh	Name
3	UNH	M	1	Message header

Standard				Implementierung		
Bez	Name	St	Format	St	Format	Anwendung / Bemerkung
0062	Message reference number	M	an..14	M	an..14	Message reference number
S009	Message identifier	M		M		
0065	Message type	M	an..6	M	an..6	**DESADV** Despatch advice message
0052	Message version number	M	an..3	M	an..3	**D** Draft version/UN/EDIFACT Directory
0054	Message release number	M	an..3	M	an..3	**20B** Release 2020 - B
0051	Controlling agency	M	an..2	M	an..2	**UN** UN/CEFACT
0057	Association assigned code	C	an..6	O	an..6	Identification of the subset release, assigned by the responsible organisation (Odette). **GAVI33** VDA DESADV - Transport order V3.3 JAI016
0110	Code list directory version number	C	an..6	N		Nicht genutzt
0113	Message type sub-function identification	C	an..6	N		Nicht genutzt
0068	Common access reference	C	an..35	N		Nicht genutzt
S010	Status of the transfer	C		N		Nicht genutzt
0070	Sequence of transfers	M	n..2	N		Nicht genutzt
0073	First and last transfer	C	a1	N		Nicht genutzt
S016	Message subset identification	C		N		Nicht genutzt
0115	Message subset identification	M	an..14	N		Nicht genutzt
0116	Message subset version number	C	an..3	N		Nicht genutzt
0118	Message subset release number	C	an..3	N		Nicht genutzt
0051	Controlling agency	C	an..2	N		Nicht genutzt
S017	Message implementation guideline identification	C		N		Nicht genutzt
0121	Message implementation guideline identification	M	an..14	N		Nicht genutzt
0122	Message implementation guideline version number	C	an..3	N		Nicht genutzt
0124	Message implementation guideline release number	C	an..3	N		Nicht genutzt
0051	Controlling agency	C	an..2	N		Nicht genutzt
S018	Scenario identification	C		N		Nicht genutzt
0127	Scenario identification	M	an..14	N		Nicht genutzt
0128	Scenario version number	C	an..3	N		Nicht genutzt
0130	Scenario release number	C	an..3	N		Nicht genutzt
0051	Controlling agency	C	an..2	N		Nicht genutzt

Beispiel:

```
UNH+9+DESADV:D:20B:UN:GAVI33'
```

Bez =Bezeichner; Nr = Laufende Segmentnummer im Guide; MaxWdh = Maximale Wiederholung; St = Status (M=Muss/Mandatory, C=Conditional, R=Erforderlich/Required, O=Optional, D=Abhängig von/Dependent, A=Empfohlen/Advised)

COPYRIGHT VDA 2026

Segmente

Nr	Bez	St	MaxWdh	Name
4	BGM	M	1	Beginning of message

Standard				Implementierung		
Bez	Name	St	Format	St	Format	Anwendung / Bemerkung
C002	Document/message name	C		R		
1001	Document name code	C	an..3	R	an..3	**343** Cartage order (local transport) **345** Ready for despatch advice
1131	Code list identification code	C	an..17	N		Nicht genutzt
3055	Code list responsible agency code	C	an..3	O	an..3	**6** UN/ECE (United Nations - Economic Commission for Europe)
1000	Document name	C	an..35	O	an..35	Additional profile information Can be used to specify a company-specific profile of this application description. The customer normally expects that the process code transferred to the supplier as part of thefirm delivery instruction returned here (e.g. LAB / FAB / JIT / KANBAN / JIS)
C106	Document/message identification	C		R		
1004	Document identifier	C	an..70	R	an..35	Unique identifier of a document. Synonym: document number
1056	Version identifier	C	an..9	O	an..9	May be used to distinguish several versions of the message (e.g. subsequent cancellation)
1060	Revision identifier	C	an..6	N		Nicht genutzt
1225	Message function code	C	an..3	O	an..3	**1** Cancellation **5** Replace **9** Original **15** Reminder
4343	Response type code	C	an..3	N		Nicht genutzt
1373	Document status code	C	an..3	N		Nicht genutzt
3453	Language name code	C	an..3	N		Nicht genutzt

Beispiel:

```
BGM+345::6:X+X:X+9'
```

Bez =Bezeichner; Nr = Laufende Segmentnummer im Guide; MaxWdh = Maximale Wiederholung; St = Status (M=Muss/Mandatory, C=Conditional, R=Erforderlich/Required, O=Optional, D=Abhängig von/Dependent, A=Empfohlen/Advised)

COPYRIGHT VDA 2026

Segmente

Nr	Bez	St	MaxWdh	Name
5	DTM	R	1	Message date

Standard				Implementierung		
Bez	Name	St	Format	St	Format	Anwendung / Bemerkung
C507	Date/time/period	M		M		
2005	Date or time or period function code qualifier	M	an..3	M	an..3	**137** Document issue date time
2380	Date or time or period text	C	an..35	R	an..12	Date, on which a document or business signal was issued.
2379	Date or time or period format code	C	an..3	O	an..3	**102** CCYYMMDD **203** CCYYMMDDHHMM **205** CCYYMMDDHHMMZHHMM

Beispiel:

```
DTM+137:201712211230:203'
```

Bez =Bezeichner; Nr = Laufende Segmentnummer im Guide; MaxWdh = Maximale Wiederholung; St = Status (M=Muss/Mandatory, C=Conditional, R=Erforderlich/Required, O=Optional, D=Abhängig von/Dependent, A=Empfohlen/Advised)

COPYRIGHT VDA 2026

Segmente

Nr	Bez	St	MaxWdh	Name
6	DTM	R	2	Requested shipment or delivery date

Standard				Implementierung		
Bez	Name	St	Format	St	Format	Anwendung / Bemerkung
C507	Date/time/period	M		M		
2005	Date or time or period function code qualifier	M	an..3	M	an..3	**10** Shipment date/time, requested **2** Delivery date/time, requested
2380	Date or time or period text	C	an..35	R	an..25	Requested shipment or delivery date
2379	Date or time or period format code	C	an..3	O	an..3	The use of time / time window depends on the concrete contract between the customer, supplier and transport service provider. **102** CCYYMMDD **203** CCYYMMDDHHMM **205** CCYYMMDDHHMMZHHMM **719** CCYYMMDDHHMM-CCYYMMDDHHMM **721** CCYYMMDDHHMMZHHMM-CCYYMMDDHHMMZHHMM

Beispiel:

```
DTM+10:201712221000:203'
```

Bez =Bezeichner; Nr = Laufende Segmentnummer im Guide; MaxWdh = Maximale Wiederholung; St = Status (M=Muss/Mandatory, C=Conditional, R=Erforderlich/Required, O=Optional, D=Abhängig von/Dependent, A=Empfohlen/Advised)

COPYRIGHT VDA 2026

Segmente

Nr	Bez	St	MaxWdh	Name
7	DTM	O	1	Estimated arrival date

Standard				Implementierung		
Bez	Name	St	Format	St	Format	Anwendung / Bemerkung
C507	Date/time/period	M		M		
2005	Date or time or period function code qualifier	M	an..3	M	an..3	**132** Transport means arrival date time, estimated
2380	Date or time or period text	C	an..35	R	an..12	Arrival date, estimated Comment: Expected date of arrival of the shipment, estimated by the sender.
2379	Date or time or period format code	C	an..3	O	an..3	**102** CCYYMMDD **203** CCYYMMDDHHMM **205** CCYYMMDDHHMMZHHMM

Beispiel:

```
DTM+132:201712231600:203'
```

Bez =Bezeichner; Nr = Laufende Segmentnummer im Guide; MaxWdh = Maximale Wiederholung; St = Status (M=Muss/Mandatory, C=Conditional, R=Erforderlich/Required, O=Optional, D=Abhängig von/Dependent, A=Empfohlen/Advised)

COPYRIGHT VDA 2026

Segmente

Nr	Bez	St	MaxWdh	Name
8	DTM	O	1	Date/time/period

Standard				Implementierung		
Bez	Name	St	Format	St	Format	Anwendung / Bemerkung
C507	Date/time/period	M		M		
2005	Date or time or period function code qualifier	M	an..3	M	an..3	**110** Ship date, originally scheduled
2380	Date or time or period text	C	an..35	R	an..12	
2379	Date or time or period format code	C	an..3	O	an..3	**102** CCYYMMDD **203** CCYYMMDDHHMM **205** CCYYMMDDHHMMZHHMM

Beispiel:

```
DTM+110:201712191000:102'
```

Bez =Bezeichner; Nr = Laufende Segmentnummer im Guide; MaxWdh = Maximale Wiederholung; St = Status (M=Muss/Mandatory, C=Conditional, R=Erforderlich/Required, O=Optional, D=Abhängig von/Dependent, A=Empfohlen/Advised)

COPYRIGHT VDA 2026

Segmente

Nr	Bez	St	MaxWdh	Name
9	ALI	O	1	Relevant to DeCA

Standard				Implementierung		
Bez	Name	St	Format	St	Format	Anwendung / Bemerkung
3239	Country of origin identifier	C	an..3	N		Nicht genutzt
9213	Duty regime type code	C	an..3	N		Nicht genutzt
4183	Special condition code	C	an..3	R	an..3	**DCA** Relevant to DeCA (Spain) ODDC013(1)
4183	Special condition code	C	an..3	N		Nicht genutzt
4183	Special condition code	C	an..3	N		Nicht genutzt
4183	Special condition code	C	an..3	N		Nicht genutzt
4183	Special condition code	C	an..3	N		Nicht genutzt

This segment indicates whether the transport order, shipment or transport leg is relevant to DeCA. The value ‘Y’ must be sent in data element 4183 if the message sender is aware of the DeCA relevance.
Beispiel:

```
ALI+++DCA'
```

Bez =Bezeichner; Nr = Laufende Segmentnummer im Guide; MaxWdh = Maximale Wiederholung; St = Status (M=Muss/Mandatory, C=Conditional, R=Erforderlich/Required, O=Optional, D=Abhängig von/Dependent, A=Empfohlen/Advised)

COPYRIGHT VDA 2026

Segmente

Nr	Bez	St	MaxWdh	Name
10	MEA	O	1	Consignment's gross weight

Standard				Implementierung		
Bez	Name	St	Format	St	Format	Anwendung / Bemerkung
6311	Measurement purpose code qualifier	M	an..3	M	an..3	**AAX** Consignment measurement
C502	Measurement details	C		R		
6313	Measured attribute code	C	an..3	R	an..3	**AAD** Consignment gross weight
6321	Measurement significance code	C	an..3	N		Nicht genutzt
6155	Non-discrete measurement name code	C	an..17	N		Nicht genutzt
6154	Non-discrete measurement name	C	an..70	N		Nicht genutzt
C174	Value/range	C		R		
6411	Measurement unit code	C	an..8	R	an..8	**KGM** Kilogramm
6314	Measure	C	an..18	R	n..12	Gross weight - weight (mass) without carrier's equipment
6162	Range minimum quantity	C	n..18	N		Nicht genutzt
6152	Range maximum quantity	C	n..18	N		Nicht genutzt
6432	Significant digits quantity	C	n..2	N		Nicht genutzt
7383	Surface or layer code	C	an..3	N		Nicht genutzt

Beispiel:

```
MEA+AAX+AAD+KGM:9'
```

Bez =Bezeichner; Nr = Laufende Segmentnummer im Guide; MaxWdh = Maximale Wiederholung; St = Status (M=Muss/Mandatory, C=Conditional, R=Erforderlich/Required, O=Optional, D=Abhängig von/Dependent, A=Empfohlen/Advised)

COPYRIGHT VDA 2026

Segmente

Nr	Bez	St	MaxWdh	Name
11	MEA	O	1	Total loading meter of the transport

Standard				Implementierung		
Bez	Name	St	Format	St	Format	Anwendung / Bemerkung
6311	Measurement purpose code qualifier	M	an..3	M	an..3	**ACA** Space occupied
C502	Measurement details	C		R		
6313	Measured attribute code	C	an..3	R	an..3	**ACV** Loading meters
6321	Measurement significance code	C	an..3	N		Nicht genutzt
6155	Non-discrete measurement name code	C	an..17	N		Nicht genutzt
6154	Non-discrete measurement name	C	an..70	N		Nicht genutzt
C174	Value/range	C		R		
6411	Measurement unit code	C	an..8	R	an..8	**MTR** metre
6314	Measure	C	an..18	R	an..18	Total loading meter of the transport
6162	Range minimum quantity	C	n..18	N		Nicht genutzt
6152	Range maximum quantity	C	n..18	N		Nicht genutzt
6432	Significant digits quantity	C	n..2	N		Nicht genutzt
7383	Surface or layer code	C	an..3	N		Nicht genutzt

Beispiel:

```
MEA+ACA+ACV+MTR:9'
```

Bez =Bezeichner; Nr = Laufende Segmentnummer im Guide; MaxWdh = Maximale Wiederholung; St = Status (M=Muss/Mandatory, C=Conditional, R=Erforderlich/Required, O=Optional, D=Abhängig von/Dependent, A=Empfohlen/Advised)

COPYRIGHT VDA 2026

Segmente

Nr	Bez	St	MaxWdh	Name
12	MEA	O	1	Consignment's loading meters

Standard				Implementierung		
Bez	Name	St	Format	St	Format	Anwendung / Bemerkung
6311	Measurement purpose code qualifier	M	an..3	M	an..3	**LMT** Loading meters
C502	Measurement details	C		N		Nicht genutzt
6313	Measured attribute code	C	an..3	N		Nicht genutzt
6321	Measurement significance code	C	an..3	N		Nicht genutzt
6155	Non-discrete measurement name code	C	an..17	N		Nicht genutzt
6154	Non-discrete measurement name	C	an..70	N		Nicht genutzt
C174	Value/range	C		R		
6411	Measurement unit code	C	an..8	R	an..8	**MTR** metre
6314	Measure	C	an..18	R	n..12	Loading meters
6162	Range minimum quantity	C	n..18	N		Nicht genutzt
6152	Range maximum quantity	C	n..18	N		Nicht genutzt
6432	Significant digits quantity	C	n..2	N		Nicht genutzt
7383	Surface or layer code	C	an..3	N		Nicht genutzt

The length in a vehicle used or usable for the transport of goods, whereby the complete width and height over that length is needed for the goods.
Beispiel:

```
MEA+LMT++MTR:9'
```

Bez =Bezeichner; Nr = Laufende Segmentnummer im Guide; MaxWdh = Maximale Wiederholung; St = Status (M=Muss/Mandatory, C=Conditional, R=Erforderlich/Required, O=Optional, D=Abhängig von/Dependent, A=Empfohlen/Advised)

COPYRIGHT VDA 2026

Segmente

Nr	Bez	St	MaxWdh	Name
13	MEA	O	1	Number of handling units in shipment

Standard				Implementierung		
Bez	Name	St	Format	St	Format	Anwendung / Bemerkung
6311	Measurement purpose code qualifier	M	an..3	M	an..3	**AAE** Measurement
C502	Measurement details	C		N		Nicht genutzt
6313	Measured attribute code	C	an..3	N		Nicht genutzt
6321	Measurement significance code	C	an..3	N		Nicht genutzt
6155	Non-discrete measurement name code	C	an..17	N		Nicht genutzt
6154	Non-discrete measurement name	C	an..70	N		Nicht genutzt
C174	Value/range	C		R		
6411	Measurement unit code	C	an..8	R	an..8	**C62** one **PCE** piece
6314	Measure	C	an..18	R	n..12	Actual number of handling units in shipment
6162	Range minimum quantity	C	n..18	N		Nicht genutzt
6152	Range maximum quantity	C	n..18	N		Nicht genutzt
6432	Significant digits quantity	C	n..2	N		Nicht genutzt
7383	Surface or layer code	C	an..3	N		Nicht genutzt

Beispiel:

```
MEA+AAE++C62:9'
```

Bez =Bezeichner; Nr = Laufende Segmentnummer im Guide; MaxWdh = Maximale Wiederholung; St = Status (M=Muss/Mandatory, C=Conditional, R=Erforderlich/Required, O=Optional, D=Abhängig von/Dependent, A=Empfohlen/Advised)

COPYRIGHT VDA 2026

Segmente

Nr	Bez	St	MaxWdh	Name
	SG1	O	1	The goods declaration number is assigned by the goods declaration office (customs).
14	RFF	M	1	The goods declaration number is assigned by the goods declaration office (customs).

Standard				Implementierung		
Bez	Name	St	Format	St	Format	Anwendung / Bemerkung
C506	Reference	M		M		
1153	Reference code qualifier	M	an..3	M	an..3	**ABT** Goods declaration document identifier, Customs
1154	Reference identifier	C	an..70	R	an..70	The goods declaration number is assigned by the goods declaration office (customs).
1156	Document line identifier	C	an..6	N		Nicht genutzt
1056	Version identifier	C	an..9	N		Nicht genutzt
1060	Revision identifier	C	an..6	N		Nicht genutzt

Beispiel:

```
RFF+ABT:123456'
```

Bez =Bezeichner; Nr = Laufende Segmentnummer im Guide; MaxWdh = Maximale Wiederholung; St = Status (M=Muss/Mandatory, C=Conditional, R=Erforderlich/Required, O=Optional, D=Abhängig von/Dependent, A=Empfohlen/Advised)

COPYRIGHT VDA 2026

Segmente

Nr	Bez	St	MaxWdh	Name
	SG1	O	1	Transport reference of the transport orderer
15	RFF	M	1	Transport reference of ship-from

Standard				Implementierung		
Bez	Name	St	Format	St	Format	Anwendung / Bemerkung
C506	Reference	M		M		
1153	Reference code qualifier	M	an..3	M	an..3	**AGK** Application reference number
1154	Reference identifier	C	an..70	R	an..70	This reference can be used by the transport ordering party as a common reference to bundle several transport orders respectively shipments, which have to be loaded on the same means of transport.
1156	Document line identifier	C	an..6	N		Nicht genutzt
1056	Version identifier	C	an..9	N		Nicht genutzt
1060	Revision identifier	C	an..6	N		Nicht genutzt

Beispiel:

```
RFF+AGK:123456'
```

Bez =Bezeichner; Nr = Laufende Segmentnummer im Guide; MaxWdh = Maximale Wiederholung; St = Status (M=Muss/Mandatory, C=Conditional, R=Erforderlich/Required, O=Optional, D=Abhängig von/Dependent, A=Empfohlen/Advised)

COPYRIGHT VDA 2026

Segmente

Nr	Bez	St	MaxWdh	Name
	SG1	O	1	Conveyance reference number / Shipment number
16	RFF	M	1	Conveyance reference number

Standard				Implementierung		
Bez	Name	St	Format	St	Format	Anwendung / Bemerkung
C506	Reference	M		M		
1153	Reference code qualifier	M	an..3	M	an..3	**CRN** Transport means journey identifier
1154	Reference identifier	C	an..70	R	an..70	Unique reference given to a certain journey or departure of a means of transport (generic term).
1156	Document line identifier	C	an..6	N		Nicht genutzt
1056	Version identifier	C	an..9	N		Nicht genutzt
1060	Revision identifier	C	an..6	N		Nicht genutzt

Beispiel:

```
RFF+CRN:2345676'
```

Bez =Bezeichner; Nr = Laufende Segmentnummer im Guide; MaxWdh = Maximale Wiederholung; St = Status (M=Muss/Mandatory, C=Conditional, R=Erforderlich/Required, O=Optional, D=Abhängig von/Dependent, A=Empfohlen/Advised)

COPYRIGHT VDA 2026

Segmente

Nr	Bez	St	MaxWdh	Name
	SG1	O	1	Transport chain reference
17	RFF	M	1	Transport chain reference

Standard				Implementierung		
Bez	Name	St	Format	St	Format	Anwendung / Bemerkung
C506	Reference	M		M		
1153	Reference code qualifier	M	an..3	M	an..3	**AKI** Ordering customer's second reference number
1154	Reference identifier	C	an..70	R	an..35	Transport chain reference
1156	Document line identifier	C	an..6	N		Nicht genutzt
1056	Version identifier	C	an..9	N		Nicht genutzt
1060	Revision identifier	C	an..6	N		Nicht genutzt

This reference links the individual transport legs of a shipment in a segmented transport chain where each leg has a separate transport order. It is assigned by the creator of the first transport order and may be the same as the order number of the first transport order. In segmented transport chains, this reference should be transmitted in all subsequent transport messages, such as following transport orders and in the associated billing.
Beispiel:

```
RFF+AKI:Transport ID'
```

Bez =Bezeichner; Nr = Laufende Segmentnummer im Guide; MaxWdh = Maximale Wiederholung; St = Status (M=Muss/Mandatory, C=Conditional, R=Erforderlich/Required, O=Optional, D=Abhängig von/Dependent, A=Empfohlen/Advised)

COPYRIGHT VDA 2026

Segmente

Nr	Bez	St	MaxWdh	Name
	SG1	O	1	Access code at pick-up, assigned by the shipping point (ship-from-party)
18	RFF	M	1	Access code at pick-up, assigned by the shipping point (ship-from-party)

Standard				Implementierung		
Bez	Name	St	Format	St	Format	Anwendung / Bemerkung
C506	Reference	M		M		
1153	Reference code qualifier	M	an..3	R	an..3	**ABE** Declarant's reference number
1154	Reference identifier	C	an..70	R	an..70	
1156	Document line identifier	C	an..6	O	an..6	Line number
1056	Version identifier	C	an..9	N		Nicht genutzt
1060	Revision identifier	C	an..6	N		Nicht genutzt

Access code at pick-up (door opener) for the access to the shipping point at ship from. In most of the cases it's the ID of the time window for the arrival at the loading point.
Beispiel:

```
RFF+ABE:ABC123:10'
```

Bez =Bezeichner; Nr = Laufende Segmentnummer im Guide; MaxWdh = Maximale Wiederholung; St = Status (M=Muss/Mandatory, C=Conditional, R=Erforderlich/Required, O=Optional, D=Abhängig von/Dependent, A=Empfohlen/Advised)

COPYRIGHT VDA 2026

Segmente

Nr	Bez	St	MaxWdh	Name
	SG1	O	1	Reference to the original transport order to be replaced
19	RFF	M	1	Reference to the original transport order to be replaced

Standard				Implementierung		
Bez	Name	St	Format	St	Format	Anwendung / Bemerkung
C506	Reference	M		M		
1153	Reference code qualifier	M	an..3	R	an..3	**AKT** Forwarding order number
1154	Reference identifier	C	an..70	R	an..70	Reference to the original transport order to be replaced
1156	Document line identifier	C	an..6	N		Nicht genutzt
1056	Version identifier	C	an..9	N		Nicht genutzt
1060	Revision identifier	C	an..6	N		Nicht genutzt

Beispiel:

```
RFF+AKT:CDE987'
```

Bez =Bezeichner; Nr = Laufende Segmentnummer im Guide; MaxWdh = Maximale Wiederholung; St = Status (M=Muss/Mandatory, C=Conditional, R=Erforderlich/Required, O=Optional, D=Abhängig von/Dependent, A=Empfohlen/Advised)

COPYRIGHT VDA 2026

Segmente

Nr	Bez	St	MaxWdh	Name
	SG1	O	1	Pick-up sheet number
20	RFF	M	1	Pick-up sheet number

Standard				Implementierung		
Bez	Name	St	Format	St	Format	Anwendung / Bemerkung
C506	Reference	M		M		
1153	Reference code qualifier	M	an..3	M	an..3	**AWU** Pick-up sheet number
1154	Reference identifier	C	an..70	R	an12	Pick-up sheet number
1156	Document line identifier	C	an..6	N		Nicht genutzt
1056	Version identifier	C	an..9	N		Nicht genutzt
1060	Revision identifier	C	an..6	N		Nicht genutzt

Beispiel:

RFF+AWU:DN0000000061'

Bez =Bezeichner; Nr = Laufende Segmentnummer im Guide; MaxWdh = Maximale Wiederholung; St = Status (M=Muss/Mandatory, C=Conditional, R=Erforderlich/Required, O=Optional, D=Abhängig von/Dependent, A=Empfohlen/Advised)

COPYRIGHT VDA 2026

Segmente

Nr	Bez	St	MaxWdh	Name
	SG1	O	1	Subset ID
21	RFF	M	1	Subset ID

Standard				Implementierung		
Bez	Name	St	Format	St	Format	Anwendung / Bemerkung
C506	Reference	M		M		
1153	Reference code qualifier	M	an..3	M	an..3	**AOZ** Implementation version number
1154	Reference identifier	C	an..70	R	an..70	Reference to the (usually customer's) subset ID/guideline version, this message is conformant to.
1156	Document line identifier	C	an..6	N		Nicht genutzt
1056	Version identifier	C	an..9	N		Nicht genutzt
1060	Revision identifier	C	an..6	N		Nicht genutzt

Beispiel:

```
RFF+AOZ:Version3.2'
```

Bez =Bezeichner; Nr = Laufende Segmentnummer im Guide; MaxWdh = Maximale Wiederholung; St = Status (M=Muss/Mandatory, C=Conditional, R=Erforderlich/Required, O=Optional, D=Abhängig von/Dependent, A=Empfohlen/Advised)

COPYRIGHT VDA 2026

Segmente

Nr	Bez	St	MaxWdh	Name
	SG2	R	1	Ship from
22	NAD	M	1	Ship from

Standard				Implementierung		
Bez	Name	St	Format	St	Format	Anwendung / Bemerkung
3035	Party function code qualifier	M	an..3	M	an..3	**SF** Ship from
C082	Party identification details	C		O		
3039	Party identifier	M	an..35	R	an..20	Unique identification of a party by an ID.
1131	Code list identification code	C	an..17	N		Nicht genutzt
3055	Code list responsible agency code	C	an..3	R	an..3	Code specifying the agency responsible for a code list. **10** ODETTE **16** US, D&B (Dun & Bradstreet Corporation) **91** Assigned by seller or seller's agent **92** Assigned by buyer or buyer's agent
C058	Name and address	C		N		Nicht genutzt
3124	Name and address description	M	an..35	N		Nicht genutzt
3124	Name and address description	C	an..35	N		Nicht genutzt
3124	Name and address description	C	an..35	N		Nicht genutzt
3124	Name and address description	C	an..35	N		Nicht genutzt
3124	Name and address description	C	an..35	N		Nicht genutzt
C080	Party name	C		O		
3036	Party name	M	an..70	M	an..35	Single text line for specification of a name
3036	Party name	C	an..70	O	an..35	see 3036 # 1
3036	Party name	C	an..70	N		Nicht genutzt
3036	Party name	C	an..70	N		Nicht genutzt
3036	Party name	C	an..70	N		Nicht genutzt
3045	Party name format code	C	an..3	N		Nicht genutzt
C059	Street	C		O		
3042	Street and number or post office box identifier	M	an..256	M	an..35	The name that identifies the location of a house or building: usually within a street as part of an address.
3042	Street and number or post office box identifier	C	an..256	O	an..35	see 3042 # 1
3042	Street and number or post office box identifier	C	an..256	N		Nicht genutzt
3042	Street and number or post office box identifier	C	an..256	N		Nicht genutzt
3164	City name	C	an..35	O	an..35	The name of the city, town, or village of this address.
C819	Country subdivision details	C		O		
3229	Country subdivision identifier	C	an..9	R	an..9	State or region within a country. The use of UN LoCodes is recommended.
1131	Code list identification code	C	an..17	N		Nicht genutzt
3055	Code list responsible agency code	C	an..3	N		Nicht genutzt
3228	Country subdivision name	C	an..70	N		Nicht genutzt
3251	Postal identification code	C	an..17	O	an..17	The identifier for one or more properties according to the postal service of that country; a group of letters and/or numbers added to the postal address to assist in the sorting of mail.

Bez =Bezeichner; Nr = Laufende Segmentnummer im Guide; MaxWdh = Maximale Wiederholung; St = Status (M=Muss/Mandatory, C=Conditional, R=Erforderlich/Required, O=Optional, D=Abhängig von/Dependent, A=Empfohlen/Advised)

COPYRIGHT VDA 2026

Segmente

Standard				Implementierung		
Bez	Name	St	Format	St	Format	Anwendung / Bemerkung
3207	Country identifier	C	an..3	O	a2	Provides the country part of an address using a code. Use ISO3166 two alpha code.

The party, which consigns or sends goods.
Beispiel:

```
NAD+SF+7654321::92++X:X+X:X++++DE'
```

Bez =Bezeichner; Nr = Laufende Segmentnummer im Guide; MaxWdh = Maximale Wiederholung; St = Status (M=Muss/Mandatory, C=Conditional, R=Erforderlich/Required, O=Optional, D=Abhängig von/Dependent, A=Empfohlen/Advised)

COPYRIGHT VDA 2026

Segmente

Nr	Bez	St	MaxWdh	Name
	SG2	R	1	Ship from
23	LOC	O	1	Shipping location/ Place of loading

Standard				Implementierung		
Bez	Name	St	Format	St	Format	Anwendung / Bemerkung
3227	Location function code qualifier	M	an..3	M	an..3	**9** Place of loading
C517	Location identification	C		R		
3225	Location identifier	C	an..35	R	an..17	Identifier / code specifying the name of a location.
1131	Code list identification code	C	an..17	N		Nicht genutzt
3055	Code list responsible agency code	C	an..3	O	an..3	**16** US, D&B (Dun & Bradstreet Corporation) **91** Assigned by seller or seller's agent **92** Assigned by buyer or buyer's agent
3224	Location name	C	an..256	O	an..256	Name of place/location, other than city name.
C519	Related location one identification	C		N		Nicht genutzt
3223	First related location identifier	C	an..35	N		Nicht genutzt
1131	Code list identification code	C	an..17	N		Nicht genutzt
3055	Code list responsible agency code	C	an..3	N		Nicht genutzt
3222	First related location name	C	an..70	N		Nicht genutzt
C553	Related location two identification	C		O		
3233	Second related location identifier	C	an..35	O	an..35	Additional location ID
1131	Code list identification code	C	an..17	N		Nicht genutzt
3055	Code list responsible agency code	C	an..3	D	an..3	Code specifying the agency responsible for a code list. Has to be provided if 3233 is used. **10** ODETTE **16** US, D&B (Dun & Bradstreet Corporation) **91** Assigned by seller or seller's agent **92** Assigned by buyer or buyer's agent
3232	Second related location name	C	an..70	O	an..70	Additional location text
5479	Relation code	C	an..3	N		Nicht genutzt

Place where goods are taken over for carriage.
Beispiel:

LOC+9+X::91:X++:::X'

Bez =Bezeichner; Nr = Laufende Segmentnummer im Guide; MaxWdh = Maximale Wiederholung; St = Status (M=Muss/Mandatory, C=Conditional, R=Erforderlich/Required, O=Optional, D=Abhängig von/Dependent, A=Empfohlen/Advised)

COPYRIGHT VDA 2026

Segmente

Nr	Bez	St	MaxWdh	Name
	SG3	O	1	Additional Party ID (DUNS)
24	RFF	M	1	Reference

Standard				Implementierung		
Bez	Name	St	Format	St	Format	Anwendung / Bemerkung
C506	Reference	M		M		
1153	Reference code qualifier	M	an..3	M	an..3	**ANK** Reference number assigned by third party
1154	Reference identifier	C	an..70	R	n9	DUNS number
1156	Document line identifier	C	an..6	N		Nicht genutzt
1056	Version identifier	C	an..9	N		Nicht genutzt
1060	Revision identifier	C	an..6	N		Nicht genutzt

This segment can be used to transmit the DUNS number of the business partner,
in addition to the customer number or the supplier number
Beispiel:

RFF+ANK:999999999'

Bez =Bezeichner; Nr = Laufende Segmentnummer im Guide; MaxWdh = Maximale Wiederholung; St = Status (M=Muss/Mandatory, C=Conditional, R=Erforderlich/Required, O=Optional, D=Abhängig von/Dependent, A=Empfohlen/Advised)

COPYRIGHT VDA 2026

Segmente

Nr	Bez	St	MaxWdh	Name
	SG3	O	1	Additional party ID - plant number
25	RFF	M	1	Additional party ID - plant number

Standard				Implementierung		
Bez	Name	St	Format	St	Format	Anwendung / Bemerkung
C506	Reference	M		M		
1153	Reference code qualifier	M	an..3	M	an..3	**PE** Plant number
1154	Reference identifier	C	an..70	R	an..70	Additional party ID - plant number
1156	Document line identifier	C	an..6	N		Nicht genutzt
1056	Version identifier	C	an..9	N		Nicht genutzt
1060	Revision identifier	C	an..6	N		Nicht genutzt

Beispiel:

```
RFF+PE:12345'
```

Bez =Bezeichner; Nr = Laufende Segmentnummer im Guide; MaxWdh = Maximale Wiederholung; St = Status (M=Muss/Mandatory, C=Conditional, R=Erforderlich/Required, O=Optional, D=Abhängig von/Dependent, A=Empfohlen/Advised)

COPYRIGHT VDA 2026

Segmente

Nr	Bez	St	MaxWdh	Name
	SG3	O	1	Fiscal number
26	RFF	M	1	Fiscal number

Standard				Implementierung		
Bez	Name	St	Format	St	Format	Anwendung / Bemerkung
C506	Reference	M		M		
1153	Reference code qualifier	M	an..3	M	an..3	**FC** Fiscal number
1154	Reference identifier	C	an..70	R	an..70	In Spain, the NIF (Número de Identificación Fiscal) must be provided as the fiscal number.
1156	Document line identifier	C	an..6	N		Nicht genutzt
1056	Version identifier	C	an..9	N		Nicht genutzt
1060	Revision identifier	C	an..6	N		Nicht genutzt

Beispiel:

```
RFF+FC:ABC123'
```

Bez =Bezeichner; Nr = Laufende Segmentnummer im Guide; MaxWdh = Maximale Wiederholung; St = Status (M=Muss/Mandatory, C=Conditional, R=Erforderlich/Required, O=Optional, D=Abhängig von/Dependent, A=Empfohlen/Advised)

COPYRIGHT VDA 2026

Segmente

Nr	Bez	St	MaxWdh	Name
	SG3	O	1	VAT registration number
27	RFF	M	1	VAT registration number

Standard				Implementierung		
Bez	Name	St	Format	St	Format	Anwendung / Bemerkung
C506	Reference	M		M		
1153	Reference code qualifier	M	an..3	M	an..3	**VA** VAT registration number
1154	Reference identifier	C	an..70	R	an..70	In Spain, the NIF (Número de Identificación Fiscal) must be provided as the fiscal number.
1156	Document line identifier	C	an..6	N		Nicht genutzt
1056	Version identifier	C	an..9	N		Nicht genutzt
1060	Revision identifier	C	an..6	N		Nicht genutzt

Beispiel:

```
RFF+VA:ABC123'
```

Bez =Bezeichner; Nr = Laufende Segmentnummer im Guide; MaxWdh = Maximale Wiederholung; St = Status (M=Muss/Mandatory, C=Conditional, R=Erforderlich/Required, O=Optional, D=Abhängig von/Dependent, A=Empfohlen/Advised)

COPYRIGHT VDA 2026

Segmente

Nr	Bez	St	MaxWdh	Name
	SG4	O	1	Expedition contact
28	CTA	M	1	Expedition contact

Standard				Implementierung		
Bez	Name	St	Format	St	Format	Anwendung / Bemerkung
3139	Contact function code	C	an..3	R	an..3	**EX** Expeditor
C056	Contact details	C		O		
3413	Contact identifier	C	an..17	O	an..17	Identifies the department or employee by a unique identifier other than their name when given as a contact.
3412	Contact name	C	an..256	O	an..256	Name of the contact person or department

Information that identifies the contact person or department responsible for expedition of goods, together with information about how they can be contacted.
Beispiel:

CTA+EX+:X'

Bez =Bezeichner; Nr = Laufende Segmentnummer im Guide; MaxWdh = Maximale Wiederholung; St = Status (M=Muss/Mandatory, C=Conditional, R=Erforderlich/Required, O=Optional, D=Abhängig von/Dependent, A=Empfohlen/Advised)

COPYRIGHT VDA 2026

Segmente

Nr	Bez	St	MaxWdh	Name
	SG4	O	1	Expedition contact
29	COM	O	3	Communication contact

Standard				Implementierung		
Bez	Name	St	Format	St	Format	Anwendung / Bemerkung
C076	Communication contact	M		M		
3148	Communication address identifier	M	an..512	M	an..100	Communication number or address. The type of communication is specified in DE 3155.
3155	Communication means type code	M	an..3	M	an..3	**EM** Electronic mail **FX** Telefax **TE** Telephone

Beispiel:

COM+X:TE'

Bez =Bezeichner; Nr = Laufende Segmentnummer im Guide; MaxWdh = Maximale Wiederholung; St = Status (M=Muss/Mandatory, C=Conditional, R=Erforderlich/Required, O=Optional, D=Abhängig von/Dependent, A=Empfohlen/Advised)

COPYRIGHT VDA 2026

Segmente

Nr	Bez	St	MaxWdh	Name
	SG4	O	1	Information contact
30	CTA	M	1	Information contact

Standard				Implementierung		
Bez	Name	St	Format	St	Format	Anwendung / Bemerkung
3139	Contact function code	C	an..3	R	an..3	**IC** Information contact
C056	Contact details	C		O		
3413	Contact identifier	C	an..17	O	an..17	Identifies the department or employee by a unique identifier other than their name when given as a contact.
3412	Contact name	C	an..256	O	an..35	Name of the contact person or department

Information that identifies the contact person or department on general matters, together with information about how they can be contacted.
Beispiel:

CTA+IC+:X'

Bez =Bezeichner; Nr = Laufende Segmentnummer im Guide; MaxWdh = Maximale Wiederholung; St = Status (M=Muss/Mandatory, C=Conditional, R=Erforderlich/Required, O=Optional, D=Abhängig von/Dependent, A=Empfohlen/Advised)

COPYRIGHT VDA 2026

Segmente

Nr	Bez	St	MaxWdh	Name
	SG4	O	1	Information contact
31	COM	O	3	Communication contact

Standard				Implementierung		
Bez	Name	St	Format	St	Format	Anwendung / Bemerkung
C076	Communication contact	M		M		
3148	Communication address identifier	M	an..512	R	an..100	The number or virtual 'address' of a telephone in a telecommunication system The number or virtual 'address' of a facsimile in a telecommunication system The number or virtual 'address' of an e-mail mailbox in the internet or other network.
3155	Communication means type code	M	an..3	M	an..3	**EM** Electronic mail **FX** Telefax **TE** Telephone

Beispiel:

COM+X:TE'

Bez =Bezeichner; Nr = Laufende Segmentnummer im Guide; MaxWdh = Maximale Wiederholung; St = Status (M=Muss/Mandatory, C=Conditional, R=Erforderlich/Required, O=Optional, D=Abhängig von/Dependent, A=Empfohlen/Advised)

COPYRIGHT VDA 2026

Segmente

Nr	Bez	St	MaxWdh	Name
	SG2	R	1	Ship to
32	NAD	M	1	ShipTo's name and address

Standard				Implementierung		
Bez	Name	St	Format	St	Format	Anwendung / Bemerkung
3035	Party function code qualifier	M	an..3	M	an..3	**ST** Ship to
C082	Party identification details	C		R		
3039	Party identifier	M	an..35	R	an..20	Party or Plant ID.
1131	Code list identification code	C	an..17	N		Nicht genutzt
3055	Code list responsible agency code	C	an..3	R	an..3	Code specifying the agency responsible for a code list. **10** ODETTE **16** US, D&B (Dun & Bradstreet Corporation) **91** Assigned by seller or seller's agent **92** Assigned by buyer or buyer's agent
C058	Name and address	C		N		Nicht genutzt
3124	Name and address description	M	an..35	N		Nicht genutzt
3124	Name and address description	C	an..35	N		Nicht genutzt
3124	Name and address description	C	an..35	N		Nicht genutzt
3124	Name and address description	C	an..35	N		Nicht genutzt
3124	Name and address description	C	an..35	N		Nicht genutzt
C080	Party name	C		O		
3036	Party name	M	an..70	M	an..35	Single text line for specification of a name
3036	Party name	C	an..70	O	an..35	Single text line for specification of a name
3036	Party name	C	an..70	N		Nicht genutzt
3036	Party name	C	an..70	N		Nicht genutzt
3036	Party name	C	an..70	N		Nicht genutzt
3045	Party name format code	C	an..3	N		Nicht genutzt
C059	Street	C		O		
3042	Street and number or post office box identifier	M	an..256	M	an..35	The name that identifies the location of a house or building: usually within a street as part of an address.
3042	Street and number or post office box identifier	C	an..256	O	an..35	
3042	Street and number or post office box identifier	C	an..256	N		Nicht genutzt
3042	Street and number or post office box identifier	C	an..256	N		Nicht genutzt
3164	City name	C	an..35	O	an..35	The name of the city, town, or village of this address.
C819	Country subdivision details	C		O		
3229	Country subdivision identifier	C	an..9	O	an..9	State or region within a country. The use of UN LoCodes is recommended.
1131	Code list identification code	C	an..17	N		Nicht genutzt
3055	Code list responsible agency code	C	an..3	N		Nicht genutzt
3228	Country subdivision name	C	an..70	N		Nicht genutzt
3251	Postal identification code	C	an..17	O	an..17	The identifier for one or more properties according to the postal service of that country; a group of letters and/or numbers added to the postal address to assist in the sorting of mail.

Bez =Bezeichner; Nr = Laufende Segmentnummer im Guide; MaxWdh = Maximale Wiederholung; St = Status (M=Muss/Mandatory, C=Conditional, R=Erforderlich/Required, O=Optional, D=Abhängig von/Dependent, A=Empfohlen/Advised)

COPYRIGHT VDA 2026

Segmente

Standard				Implementierung		
Bez	Name	St	Format	St	Format	Anwendung / Bemerkung
3207	Country identifier	C	an..3	O	a2	Provides the country part of an address using a code. Use ISO3166 two alpha code. The codes of this code list are documented in a separate document

In most cases it will be sufficient to use C082 for identification of invoicee. If not, either C058 (unstructured address) or C080 and following data elements should be used (structured address). The preferred version is the structured address.
The party to which goods are to be shipped (consigned).
Beispiel:

NAD+ST+X::10++X:X+X:X++++DE'

Bez =Bezeichner; Nr = Laufende Segmentnummer im Guide; MaxWdh = Maximale Wiederholung; St = Status (M=Muss/Mandatory, C=Conditional, R=Erforderlich/Required, O=Optional, D=Abhängig von/Dependent, A=Empfohlen/Advised)

COPYRIGHT VDA 2026

Segmente

Nr	Bez	St	MaxWdh	Name
	SG2	R	1	Ship to
33	LOC	O	3	Place of discharge

Standard				Implementierung		
Bez	Name	St	Format	St	Format	Anwendung / Bemerkung
3227	Location function code qualifier	M	an..3	M	an..3	**7** Place of delivery **11** Place of discharge **13** Place of transhipment
C517	Location identification	C		R		
3225	Location identifier	C	an..35	O	an..35	Identifier of location, site, etc.
1131	Code list identification code	C	an..17	N		Nicht genutzt
3055	Code list responsible agency code	C	an..3	N		Nicht genutzt
3224	Location name	C	an..256	O	an..256	Name of place/location; if necessary, use complete address.
C519	Related location one identification	C		N		Nicht genutzt
3223	First related location identifier	C	an..35	N		Nicht genutzt
1131	Code list identification code	C	an..17	N		Nicht genutzt
3055	Code list responsible agency code	C	an..3	N		Nicht genutzt
3222	First related location name	C	an..70	N		Nicht genutzt
C553	Related location two identification	C		O		
3233	Second related location identifier	C	an..35	O	an..35	Additional location ID
1131	Code list identification code	C	an..17	N		Nicht genutzt
3055	Code list responsible agency code	C	an..3	D	an..3	Code specifying the agency responsible for a code list. Has to be provided if 3233 is used. **10** ODETTE **16** US, D&B (Dun & Bradstreet Corporation) **91** Assigned by seller or seller's agent **92** Assigned by buyer or buyer's agent
3232	Second related location name	C	an..70	O	an..70	Additional location text
5479	Relation code	C	an..3	N		Nicht genutzt

Beispiel:

```
LOC+11+X:::X++:::X'
```

Bez =Bezeichner; Nr = Laufende Segmentnummer im Guide; MaxWdh = Maximale Wiederholung; St = Status (M=Muss/Mandatory, C=Conditional, R=Erforderlich/Required, O=Optional, D=Abhängig von/Dependent, A=Empfohlen/Advised)

COPYRIGHT VDA 2026

Segmente

Nr	Bez	St	MaxWdh	Name
	SG3	O	1	Additional Party ID (DUNS)
34	RFF	M	1	Reference

Standard				Implementierung		
Bez	Name	St	Format	St	Format	Anwendung / Bemerkung
C506	Reference	M		M		
1153	Reference code qualifier	M	an..3	M	an..3	**ANK** Reference number assigned by third party
1154	Reference identifier	C	an..70	R	an..17	DUNS number
1156	Document line identifier	C	an..6	N		Nicht genutzt
1056	Version identifier	C	an..9	N		Nicht genutzt
1060	Revision identifier	C	an..6	N		Nicht genutzt

This segment can be used to transmit the DUNS number of the business partner, in addition to the customer number or the supplier number.
Beispiel:

RFF+ANK:999999999'

Bez =Bezeichner; Nr = Laufende Segmentnummer im Guide; MaxWdh = Maximale Wiederholung; St = Status (M=Muss/Mandatory, C=Conditional, R=Erforderlich/Required, O=Optional, D=Abhängig von/Dependent, A=Empfohlen/Advised)

COPYRIGHT VDA 2026

Segmente

Nr	Bez	St	MaxWdh	Name
	SG3	O	1	Fiscal number
35	RFF	M	1	Fiscal number

Standard				Implementierung		
Bez	Name	St	Format	St	Format	Anwendung / Bemerkung
C506	Reference	M		M		
1153	Reference code qualifier	M	an..3	M	an..3	**FC** Fiscal number
1154	Reference identifier	C	an..70	R	an..70	In Spain, the NIF (Número de Identificación Fiscal) must be provided as the fiscal number.
1156	Document line identifier	C	an..6	N		Nicht genutzt
1056	Version identifier	C	an..9	N		Nicht genutzt
1060	Revision identifier	C	an..6	N		Nicht genutzt

Beispiel:

```
RFF+FC:ABC123'
```

Bez =Bezeichner; Nr = Laufende Segmentnummer im Guide; MaxWdh = Maximale Wiederholung; St = Status (M=Muss/Mandatory, C=Conditional, R=Erforderlich/Required, O=Optional, D=Abhängig von/Dependent, A=Empfohlen/Advised)

COPYRIGHT VDA 2026

Segmente

Nr	Bez	St	MaxWdh	Name
	SG3	O	1	Additional party ID - plant number
36	RFF	M	1	Additional party ID - plant number

Standard				Implementierung		
Bez	Name	St	Format	St	Format	Anwendung / Bemerkung
C506	Reference	M		M		
1153	Reference code qualifier	M	an..3	M	an..3	**PE** Plant number
1154	Reference identifier	C	an..70	R	an..70	Additional party ID - plant number
1156	Document line identifier	C	an..6	N		Nicht genutzt
1056	Version identifier	C	an..9	N		Nicht genutzt
1060	Revision identifier	C	an..6	N		Nicht genutzt

Beispiel:

```
RFF+PE:12345'
```

Bez =Bezeichner; Nr = Laufende Segmentnummer im Guide; MaxWdh = Maximale Wiederholung; St = Status (M=Muss/Mandatory, C=Conditional, R=Erforderlich/Required, O=Optional, D=Abhängig von/Dependent, A=Empfohlen/Advised)

COPYRIGHT VDA 2026

Segmente

Nr	Bez	St	MaxWdh	Name
	SG3	O	1	VAT registration number
37	RFF	M	1	VAT registration number

Standard				Implementierung		
Bez	Name	St	Format	St	Format	Anwendung / Bemerkung
C506	Reference	M		M		
1153	Reference code qualifier	M	an..3	M	an..3	**VA** VAT registration number
1154	Reference identifier	C	an..70	R	an..70	In Spain, the NIF (Número de Identificación Fiscal) must be provided as the fiscal number.
1156	Document line identifier	C	an..6	N		Nicht genutzt
1056	Version identifier	C	an..9	N		Nicht genutzt
1060	Revision identifier	C	an..6	N		Nicht genutzt

Beispiel:

```
RFF+VA:ABC123'
```

Bez =Bezeichner; Nr = Laufende Segmentnummer im Guide; MaxWdh = Maximale Wiederholung; St = Status (M=Muss/Mandatory, C=Conditional, R=Erforderlich/Required, O=Optional, D=Abhängig von/Dependent, A=Empfohlen/Advised)

COPYRIGHT VDA 2026

Segmente

Nr	Bez	St	MaxWdh	Name
	SG2	R	1	Buyer
		Party to whom merchandise and/or service is sold.		
38	NAD	M	1	Buyer's name and address

Standard				Implementierung		
Bez	Name	St	Format	St	Format	Anwendung / Bemerkung
3035	Party function code qualifier	M	an..3	M	an..3	**BY** Buyer
C082	Party identification details	C		R		
3039	Party identifier	M	an..35	M	an..35	Unique identification of a party by an ID.
1131	Code list identification code	C	an..17	N		Nicht genutzt
3055	Code list responsible agency code	C	an..3	R	an..3	Code specifying the agency responsible for a code list. **10** ODETTE **16** US, D&B (Dun & Bradstreet Corporation) **91** Assigned by seller or seller's agent **92** Assigned by buyer or buyer's agent
C058	Name and address	C		N		Nicht genutzt
3124	Name and address description	M	an..35	N		Nicht genutzt
3124	Name and address description	C	an..35	N		Nicht genutzt
3124	Name and address description	C	an..35	N		Nicht genutzt
3124	Name and address description	C	an..35	N		Nicht genutzt
3124	Name and address description	C	an..35	N		Nicht genutzt
C080	Party name	C		O		
3036	Party name	M	an..70	M	an..35	Single text line for specification of a name
3036	Party name	C	an..70	O	an..35	see 3036 # 1
3036	Party name	C	an..70	N		Nicht genutzt
3036	Party name	C	an..70	N		Nicht genutzt
3036	Party name	C	an..70	N		Nicht genutzt
3045	Party name format code	C	an..3	N		Nicht genutzt
C059	Street	C		O		
3042	Street and number or post office box identifier	M	an..256	M	an..35	The name that identifies the location of a house or building: usually within a street as part of an address.
3042	Street and number or post office box identifier	C	an..256	O	an..35	
3042	Street and number or post office box identifier	C	an..256	N		Nicht genutzt
3042	Street and number or post office box identifier	C	an..256	N		Nicht genutzt
3164	City name	C	an..35	O	an..35	The name of the city, town, or village of this address.
C819	Country subdivision details	C		O		
3229	Country subdivision identifier	C	an..9	R	an..9	State or region within a country. The use of UN LoCodes is recommended.
1131	Code list identification code	C	an..17	N		Nicht genutzt
3055	Code list responsible agency code	C	an..3	N		Nicht genutzt
3228	Country subdivision name	C	an..70	N		Nicht genutzt
3251	Postal identification code	C	an..17	O	an..17	The identifier for one or more properties according to the postal service of that country; a group of letters and/or numbers added to the postal address to assist in the sorting

Bez =Bezeichner; Nr = Laufende Segmentnummer im Guide; MaxWdh = Maximale Wiederholung; St = Status (M=Muss/Mandatory, C=Conditional, R=Erforderlich/Required, O=Optional, D=Abhängig von/Dependent, A=Empfohlen/Advised)

COPYRIGHT VDA 2026

Segmente

Standard				Implementierung		
Bez	Name	St	Format	St	Format	Anwendung / Bemerkung
						of mail.
3207	Country identifier	C	an..3	O	an..3	Provides the country part of an address using a code. Use ISO3166 two alpha code.

In most cases it will be sufficient to use C082 for identification of invoicee. If not, either C058 (unstructured address) or C080 and following data elements should be used (structured address). The preferred version is the structured address.
Beispiel:

NAD+BY+X::10++X:X+X:X++++DE'

COPYRIGHT VDA 2026

Generated by GEFEG.FX

Segmente

Nr	Bez	St	MaxWdh	Name
	SG3	O	1	Additional Party ID (DUNS)
39	RFF	M	1	Reference

Standard				Implementierung		
Bez	Name	St	Format	St	Format	Anwendung / Bemerkung
C506	Reference	M		M		
1153	Reference code qualifier	M	an..3	M	an..3	**ANK** Reference number assigned by third party
1154	Reference identifier	C	an..70	R	n9	DUNS number
1156	Document line identifier	C	an..6	N		Nicht genutzt
1056	Version identifier	C	an..9	N		Nicht genutzt
1060	Revision identifier	C	an..6	N		Nicht genutzt

This segment can be used to transmit the DUNS number of the business partner, in addition to the customer number or the supplier number.
Beispiel:

```
RFF+ANK:999999999'
```

Bez =Bezeichner; Nr = Laufende Segmentnummer im Guide; MaxWdh = Maximale Wiederholung; St = Status (M=Muss/Mandatory, C=Conditional, R=Erforderlich/Required, O=Optional, D=Abhängig von/Dependent, A=Empfohlen/Advised)

COPYRIGHT VDA 2026

Segmente

Nr	Bez	St	MaxWdh	Name
	SG3	O	1	Fiscal number
40	RFF	M	1	Fiscal number

Standard				Implementierung		
Bez	Name	St	Format	St	Format	Anwendung / Bemerkung
C506	Reference	M		M		
1153	Reference code qualifier	M	an..3	M	an..3	**FC** Fiscal number
1154	Reference identifier	C	an..70	R	an..70	In Spain, the NIF (Número de Identificación Fiscal) must be provided as the fiscal number.
1156	Document line identifier	C	an..6	N		Nicht genutzt
1056	Version identifier	C	an..9	N		Nicht genutzt
1060	Revision identifier	C	an..6	N		Nicht genutzt

Beispiel:

```
RFF+FC:ABC123'
```

Bez =Bezeichner; Nr = Laufende Segmentnummer im Guide; MaxWdh = Maximale Wiederholung; St = Status (M=Muss/Mandatory, C=Conditional, R=Erforderlich/Required, O=Optional, D=Abhängig von/Dependent, A=Empfohlen/Advised)

COPYRIGHT VDA 2026

Segmente

Nr	Bez	St	MaxWdh	Name
	SG3	O	1	VAT registration number
41	RFF	M	1	VAT registration number

Standard				Implementierung		
Bez	Name	St	Format	St	Format	Anwendung / Bemerkung
C506	Reference	M		M		
1153	Reference code qualifier	M	an..3	M	an..3	**VA** VAT registration number
1154	Reference identifier	C	an..70	R	an..70	In Spain, the NIF (Número de Identificación Fiscal) must be provided as the fiscal number.
1156	Document line identifier	C	an..6	N		Nicht genutzt
1056	Version identifier	C	an..9	N		Nicht genutzt
1060	Revision identifier	C	an..6	N		Nicht genutzt

Beispiel:

```
RFF+VA:ABC123'
```

Bez =Bezeichner; Nr = Laufende Segmentnummer im Guide; MaxWdh = Maximale Wiederholung; St = Status (M=Muss/Mandatory, C=Conditional, R=Erforderlich/Required, O=Optional, D=Abhängig von/Dependent, A=Empfohlen/Advised)

COPYRIGHT VDA 2026

Segmente

Nr	Bez	St	MaxWdh	Name
	SG2	O	1	Seller / Supplier
42	NAD	M	1	Seller's name and address

Standard				Implementierung		
Bez	Name	St	Format	St	Format	Anwendung / Bemerkung
3035	Party function code qualifier	M	an..3	M	an..3	**SE** Seller
C082	Party identification details	C		R		
3039	Party identifier	M	an..35	M	an..35	Unique identification of a party by an ID.
1131	Code list identification code	C	an..17	N		Nicht genutzt
3055	Code list responsible agency code	C	an..3	R	an..3	Code specifying the agency responsible for a code list. **10** ODETTE **16** US, D&B (Dun & Bradstreet Corporation) **91** Assigned by seller or seller's agent **92** Assigned by buyer or buyer's agent
C058	Name and address	C		N		Nicht genutzt
3124	Name and address description	M	an..35	N		Nicht genutzt
3124	Name and address description	C	an..35	N		Nicht genutzt
3124	Name and address description	C	an..35	N		Nicht genutzt
3124	Name and address description	C	an..35	N		Nicht genutzt
3124	Name and address description	C	an..35	N		Nicht genutzt
C080	Party name	C		O		
3036	Party name	M	an..70	M	an..35	Single text line for specification of a name
3036	Party name	C	an..70	O	an..35	see 3036 # 1
3036	Party name	C	an..70	N		Nicht genutzt
3036	Party name	C	an..70	N		Nicht genutzt
3036	Party name	C	an..70	N		Nicht genutzt
3045	Party name format code	C	an..3	N		Nicht genutzt
C059	Street	C		O		
3042	Street and number or post office box identifier	M	an..256	M	an..35	The name that identifies the location of a house or building: usually within a street as part of an address.
3042	Street and number or post office box identifier	C	an..256	O	an..35	see 3042 # 1
3042	Street and number or post office box identifier	C	an..256	N		Nicht genutzt
3042	Street and number or post office box identifier	C	an..256	N		Nicht genutzt
3164	City name	C	an..35	O	an..35	The name of the city, town, or village of this address.
C819	Country subdivision details	C		O		
3229	Country subdivision identifier	C	an..9	R	an..9	State or region within a country. The use of UN LoCodes is recommended.
1131	Code list identification code	C	an..17	N		Nicht genutzt
3055	Code list responsible agency code	C	an..3	N		Nicht genutzt
3228	Country subdivision name	C	an..70	N		Nicht genutzt
3251	Postal identification code	C	an..17	O	an..17	The identifier for one or more properties according to the postal service of that country; a group of letters and/or numbers added to the postal address to assist in the sorting of mail.

Bez =Bezeichner; Nr = Laufende Segmentnummer im Guide; MaxWdh = Maximale Wiederholung; St = Status (M=Muss/Mandatory, C=Conditional, R=Erforderlich/Required, O=Optional, D=Abhängig von/Dependent, A=Empfohlen/Advised)

COPYRIGHT VDA 2026

Segmente

Standard				Implementierung		
Bez	Name	St	Format	St	Format	Anwendung / Bemerkung
3207	Country identifier	C	an..3	O	a2	Provides the country part of an address using a code. Use ISO3166 two alpha code.

In most cases it will be sufficient to use C082 for identification of invoicee. If not, either C058 (unstructured address) or C080 and following data elements should be used (structured address). The preferred version is the structured address.
Party selling merchandise to a buyer.
Beispiel:

NAD+SE+X::10++X:X+X:X++++DE'

Bez =Bezeichner; Nr = Laufende Segmentnummer im Guide; MaxWdh = Maximale Wiederholung; St = Status (M=Muss/Mandatory, C=Conditional, R=Erforderlich/Required, O=Optional, D=Abhängig von/Dependent, A=Empfohlen/Advised)

COPYRIGHT VDA 2026

Segmente

Nr	Bez	St	MaxWdh	Name
	SG3	O	1	Additional Party ID (DUNS)
43	RFF	M	1	Reference

Standard				Implementierung		
Bez	Name	St	Format	St	Format	Anwendung / Bemerkung
C506	Reference	M		M		
1153	Reference code qualifier	M	an..3	M	an..3	**ANK** Reference number assigned by third party
1154	Reference identifier	C	an..70	R	n9	DUNS number
1156	Document line identifier	C	an..6	N		Nicht genutzt
1056	Version identifier	C	an..9	N		Nicht genutzt
1060	Revision identifier	C	an..6	N		Nicht genutzt

This segment can be used to transmit the DUNS number of the business partner, in addition to the customer number or the supplier number.
Beispiel:

```
RFF+ANK:999999999'
```

Bez =Bezeichner; Nr = Laufende Segmentnummer im Guide; MaxWdh = Maximale Wiederholung; St = Status (M=Muss/Mandatory, C=Conditional, R=Erforderlich/Required, O=Optional, D=Abhängig von/Dependent, A=Empfohlen/Advised)

COPYRIGHT VDA 2026

Segmente

Nr	Bez	St	MaxWdh	Name
	SG3	O	1	Fiscal number
44	RFF	M	1	Fiscal number

Standard				Implementierung		
Bez	Name	St	Format	St	Format	Anwendung / Bemerkung
C506	Reference	M		M		
1153	Reference code qualifier	M	an..3	M	an..3	**FC** Fiscal number
1154	Reference identifier	C	an..70	R	an..70	In Spain, the NIF (Número de Identificación Fiscal) must be provided as the fiscal number.
1156	Document line identifier	C	an..6	N		Nicht genutzt
1056	Version identifier	C	an..9	N		Nicht genutzt
1060	Revision identifier	C	an..6	N		Nicht genutzt

Beispiel:

```
RFF+FC:ABC123'
```

Bez =Bezeichner; Nr = Laufende Segmentnummer im Guide; MaxWdh = Maximale Wiederholung; St = Status (M=Muss/Mandatory, C=Conditional, R=Erforderlich/Required, O=Optional, D=Abhängig von/Dependent, A=Empfohlen/Advised)

COPYRIGHT VDA 2026

Segmente

Nr	Bez	St	MaxWdh	Name
	SG3	O	1	VAT registration number
45	RFF	M	1	VAT registration number

Standard				Implementierung		
Bez	Name	St	Format	St	Format	Anwendung / Bemerkung
C506	Reference	M		M		
1153	Reference code qualifier	M	an..3	M	an..3	**VA** VAT registration number
1154	Reference identifier	C	an..70	R	an..70	In Spain, the NIF (Número de Identificación Fiscal) must be provided as the fiscal number.
1156	Document line identifier	C	an..6	N		Nicht genutzt
1056	Version identifier	C	an..9	N		Nicht genutzt
1060	Revision identifier	C	an..6	N		Nicht genutzt

Beispiel:

```
RFF+VA:ABC123'
```

Bez =Bezeichner; Nr = Laufende Segmentnummer im Guide; MaxWdh = Maximale Wiederholung; St = Status (M=Muss/Mandatory, C=Conditional, R=Erforderlich/Required, O=Optional, D=Abhängig von/Dependent, A=Empfohlen/Advised)

COPYRIGHT VDA 2026

Segmente

Nr	Bez	St	MaxWdh	Name
	SG2	R	1	Freight forwarder
46	NAD	M	1	Freight forwarder's name and address

Standard				Implementierung		
Bez	Name	St	Format	St	Format	Anwendung / Bemerkung
3035	Party function code qualifier	M	an..3	M	an..3	**FW** Freight forwarder
C082	Party identification details	C		R		
3039	Party identifier	M	an..35	R	an..35	Unique identification of a party by an ID. Standard process: assigned by the OEM, if the supplier pays the freight, the partner ID assigned by the supplier is in this field.
1131	Code list identification code	C	an..17	N		Nicht genutzt
3055	Code list responsible agency code	C	an..3	R	an..3	Code specifying the agency responsible for a code list. **10** ODETTE **16** US, D&B (Dun & Bradstreet Corporation) **91** Assigned by seller or seller's agent **92** Assigned by buyer or buyer's agent
C058	Name and address	C		N		Nicht genutzt
3124	Name and address description	M	an..35	N		Nicht genutzt
3124	Name and address description	C	an..35	N		Nicht genutzt
3124	Name and address description	C	an..35	N		Nicht genutzt
3124	Name and address description	C	an..35	N		Nicht genutzt
3124	Name and address description	C	an..35	N		Nicht genutzt
C080	Party name	C		O		
3036	Party name	M	an..70	M	an..35	Freight Forwarder's Name Single text line for specification of a name
3036	Party name	C	an..70	O	an..35	see 3036 # 1
3036	Party name	C	an..70	N		Nicht genutzt
3036	Party name	C	an..70	N		Nicht genutzt
3036	Party name	C	an..70	N		Nicht genutzt
3045	Party name format code	C	an..3	N		Nicht genutzt
C059	Street	C		O		
3042	Street and number or post office box identifier	M	an..256	M	an..35	The name that identifies the location of a house or building: usually within a street as part of an address.
3042	Street and number or post office box identifier	C	an..256	O	an..35	see 3042 # 1
3042	Street and number or post office box identifier	C	an..256	N		Nicht genutzt
3042	Street and number or post office box identifier	C	an..256	N		Nicht genutzt
3164	City name	C	an..35	O	an..35	The name of the city, town, or village of this address.
C819	Country subdivision details	C		O		
3229	Country subdivision identifier	C	an..9	R	an..9	State or region within a country. The use of UN LoCodes is recommended.
1131	Code list identification code	C	an..17	N		Nicht genutzt
3055	Code list responsible agency code	C	an..3	N		Nicht genutzt
3228	Country subdivision name	C	an..70	N		Nicht genutzt
	Postal identification code	C	an..17	O	an..17	The identifier for one or more properties according to the

Bez =Bezeichner; Nr = Laufende Segmentnummer im Guide; MaxWdh = Maximale Wiederholung; St = Status (M=Muss/Mandatory, C=Conditional, R=Erforderlich/Required, O=Optional, D=Abhängig von/Dependent, A=Empfohlen/Advised)

COPYRIGHT VDA 2026

Segmente

Standard				Implementierung		
Bez	Name	St	Format	St	Format	Anwendung / Bemerkung
3251						postal service of that country; a group of letters and/or numbers added to the postal address to assist in the sorting of mail.
3207	Country identifier	C	an..3	O	a2	Provides the country part of an address using a code. Use ISO3166 two alpha code.

In most cases it will be sufficient to use C082 for identification of invoicee. If not, either C058 (unstructured address) or C080 and following data elements should be used (structured address). The preferred version is the structured address.
Beispiel:

NAD+FW+X::10++X:X+X:X++++DE'

Bez =Bezeichner; Nr = Laufende Segmentnummer im Guide; MaxWdh = Maximale Wiederholung; St = Status (M=Muss/Mandatory, C=Conditional, R=Erforderlich/Required, O=Optional, D=Abhängig von/Dependent, A=Empfohlen/Advised)

COPYRIGHT VDA 2026

Segmente

Nr	Bez	St	MaxWdh	Name
	SG3	O	1	Additional Party ID (DUNS)
47	RFF	M	1	Reference

Standard				Implementierung		
Bez	Name	St	Format	St	Format	Anwendung / Bemerkung
C506	Reference	M		M		
1153	Reference code qualifier	M	an..3	M	an..3	**ANK** Reference number assigned by third party
1154	Reference identifier	C	an..70	R	an..70	DUNS number
1156	Document line identifier	C	an..6	N		Nicht genutzt
1056	Version identifier	C	an..9	N		Nicht genutzt
1060	Revision identifier	C	an..6	N		Nicht genutzt

This segment can be used to transmit the DUNS number of the business partner, in addition to the customer number or the supplier number.
Beispiel:

RFF+ANK:999999999'

Bez =Bezeichner; Nr = Laufende Segmentnummer im Guide; MaxWdh = Maximale Wiederholung; St = Status (M=Muss/Mandatory, C=Conditional, R=Erforderlich/Required, O=Optional, D=Abhängig von/Dependent, A=Empfohlen/Advised)

COPYRIGHT VDA 2026

Segmente

Nr	Bez	St	MaxWdh	Name
	SG3	O	1	Fiscal number
48	RFF	M	1	Fiscal number

Standard				Implementierung		
Bez	Name	St	Format	St	Format	Anwendung / Bemerkung
C506	Reference	M		M		
1153	Reference code qualifier	M	an..3	M	an..3	**FC** Fiscal number
1154	Reference identifier	C	an..70	R	an..70	In Spain, the NIF (Número de Identificación Fiscal) must be provided as the fiscal number.
1156	Document line identifier	C	an..6	N		Nicht genutzt
1056	Version identifier	C	an..9	N		Nicht genutzt
1060	Revision identifier	C	an..6	N		Nicht genutzt

Beispiel:

```
RFF+FC:ABC123'
```

Bez =Bezeichner; Nr = Laufende Segmentnummer im Guide; MaxWdh = Maximale Wiederholung; St = Status (M=Muss/Mandatory, C=Conditional, R=Erforderlich/Required, O=Optional, D=Abhängig von/Dependent, A=Empfohlen/Advised)

COPYRIGHT VDA 2026

Segmente

Nr	Bez	St	MaxWdh	Name
	SG3	O	1	VAT registration number
49	RFF	M	1	VAT registration number

Standard				Implementierung		
Bez	Name	St	Format	St	Format	Anwendung / Bemerkung
C506	Reference	M		M		
1153	Reference code qualifier	M	an..3	M	an..3	**VA** VAT registration number
1154	Reference identifier	C	an..70	R	an..70	In Spain, the NIF (Número de Identificación Fiscal) must be provided as the fiscal number.
1156	Document line identifier	C	an..6	N		Nicht genutzt
1056	Version identifier	C	an..9	N		Nicht genutzt
1060	Revision identifier	C	an..6	N		Nicht genutzt

Beispiel:

```
RFF+VA:ABC123'
```

Bez =Bezeichner; Nr = Laufende Segmentnummer im Guide; MaxWdh = Maximale Wiederholung; St = Status (M=Muss/Mandatory, C=Conditional, R=Erforderlich/Required, O=Optional, D=Abhängig von/Dependent, A=Empfohlen/Advised)

COPYRIGHT VDA 2026

Segmente

Nr	Bez	St	MaxWdh	Name
	SG4	O	1	Information contact
50	CTA	M	1	Information contact

Standard				Implementierung		
Bez	Name	St	Format	St	Format	Anwendung / Bemerkung
3139	Contact function code	C	an..3	R	an..3	**IC** Information contact
C056	Contact details	C		O		
3413	Contact identifier	C	an..17	O	an..17	Identifies the department or employee by a unique identifier other than their name when given as a contact.
3412	Contact name	C	an..256	O	an..35	Name of the contact person or department

Information that identifies the contact person or department on general matters, together with information about how they can be contacted.
Beispiel:

CTA+IC+:X'

Bez =Bezeichner; Nr = Laufende Segmentnummer im Guide; MaxWdh = Maximale Wiederholung; St = Status (M=Muss/Mandatory, C=Conditional, R=Erforderlich/Required, O=Optional, D=Abhängig von/Dependent, A=Empfohlen/Advised)

COPYRIGHT VDA 2026

Segmente

Nr	Bez	St	MaxWdh	Name
	SG4	O	1	Information contact
51	COM	O	3	Communication contact

Standard				Implementierung		
Bez	Name	St	Format	St	Format	Anwendung / Bemerkung
C076	Communication contact	M		M		
3148	Communication address identifier	M	an..512	M	an..100	The number or virtual 'address' of a telephone in a telecommunication system The number or virtual 'address' of a facsimile in a telecommunication system The number or virtual 'address' of an e-mail mailbox in the internet or other network.
3155	Communication means type code	M	an..3	M	an..3	**EM** Electronic mail **FX** Telefax **TE** Telephone

Beispiel:

COM+X:EM'

Bez =Bezeichner; Nr = Laufende Segmentnummer im Guide; MaxWdh = Maximale Wiederholung; St = Status (M=Muss/Mandatory, C=Conditional, R=Erforderlich/Required, O=Optional, D=Abhängig von/Dependent, A=Empfohlen/Advised)

COPYRIGHT VDA 2026

Segmente

Nr	Bez	St	MaxWdh	Name
	SG2	D	1	Transport ordering party
52	NAD	M	1	Transport ordering party - name and address

Standard				Implementierung		
Bez	Name	St	Format	St	Format	Anwendung / Bemerkung
3035	Party function code qualifier	M	an..3	M	an..3	**OY** Ordering customer
C082	Party identification details	C		O		
3039	Party identifier	M	an..35	M	an..35	Identification - customer number at the forwarder
1131	Code list identification code	C	an..17	N		Nicht genutzt
3055	Code list responsible agency code	C	an..3	R	an..3	**16** US, D&B (Dun & Bradstreet Corporation) **91** Assigned by seller or seller's agent **92** Assigned by buyer or buyer's agent
C058	Name and address	C		N		Nicht genutzt
3124	Name and address description	M	an..35	N		Nicht genutzt
3124	Name and address description	C	an..35	N		Nicht genutzt
3124	Name and address description	C	an..35	N		Nicht genutzt
3124	Name and address description	C	an..35	N		Nicht genutzt
3124	Name and address description	C	an..35	N		Nicht genutzt
C080	Party name	C		O		
3036	Party name	M	an..70	M	an..35	
3036	Party name	C	an..70	O	an..35	
3036	Party name	C	an..70	N		Nicht genutzt
3036	Party name	C	an..70	N		Nicht genutzt
3036	Party name	C	an..70	N		Nicht genutzt
3045	Party name format code	C	an..3	N		Nicht genutzt
C059	Street	C		O		
3042	Street and number or post office box identifier	M	an..256	M	an..35	
3042	Street and number or post office box identifier	C	an..256	N		Nicht genutzt
3042	Street and number or post office box identifier	C	an..256	N		Nicht genutzt
3042	Street and number or post office box identifier	C	an..256	N		Nicht genutzt
3164	City name	C	an..35	O	an..35	
C819	Country subdivision details	C		O		
3229	Country subdivision identifier	C	an..9	R	an..9	
1131	Code list identification code	C	an..17	N		Nicht genutzt
3055	Code list responsible agency code	C	an..3	N		Nicht genutzt
3228	Country subdivision name	C	an..70	N		Nicht genutzt
3251	Postal identification code	C	an..17	O	an..17	
3207	Country identifier	C	an..3	O	an..3	

Identification of the transport ordering and paying party according to forwarder's identification system.
Beispiel:

Bez =Bezeichner; Nr = Laufende Segmentnummer im Guide; MaxWdh = Maximale Wiederholung; St = Status (M=Muss/Mandatory, C=Conditional, R=Erforderlich/Required, O=Optional, D=Abhängig von/Dependent, A=Empfohlen/Advised)

COPYRIGHT VDA 2026

Segmente

```
NAD+OY+X::16++Autoteile Zulieferer GmbH:X+X+X++X+AD'
```

Bez =Bezeichner; Nr = Laufende Segmentnummer im Guide; MaxWdh = Maximale Wiederholung; St = Status (M=Muss/Mandatory, C=Conditional, R=Erforderlich/Required, O=Optional, D=Abhängig von/Dependent, A=Empfohlen/Advised)

COPYRIGHT VDA 2026

Segmente

Nr	Bez	St	MaxWdh	Name
	SG3	O	1	Fiscal number
53	RFF	M	1	Fiscal number

Standard				Implementierung		
Bez	Name	St	Format	St	Format	Anwendung / Bemerkung
C506	Reference	M		M		
1153	Reference code qualifier	M	an..3	M	an..3	**FC** Fiscal number
1154	Reference identifier	C	an..70	R	an..70	In Spain, the NIF (Número de Identificación Fiscal) must be provided as the fiscal number.
1156	Document line identifier	C	an..6	N		Nicht genutzt
1056	Version identifier	C	an..9	N		Nicht genutzt
1060	Revision identifier	C	an..6	N		Nicht genutzt

Beispiel:

```
RFF+FC:ABC123'
```

Bez =Bezeichner; Nr = Laufende Segmentnummer im Guide; MaxWdh = Maximale Wiederholung; St = Status (M=Muss/Mandatory, C=Conditional, R=Erforderlich/Required, O=Optional, D=Abhängig von/Dependent, A=Empfohlen/Advised)

COPYRIGHT VDA 2026

Segmente

Nr	Bez	St	MaxWdh	Name
	SG3	O	1	VAT registration number
54	RFF	M	1	VAT registration number

Standard				Implementierung		
Bez	Name	St	Format	St	Format	Anwendung / Bemerkung
C506	Reference	M		M		
1153	Reference code qualifier	M	an..3	M	an..3	**VA** VAT registration number
1154	Reference identifier	C	an..70	R	an..70	In Spain, the NIF (Número de Identificación Fiscal) must be provided as the fiscal number.
1156	Document line identifier	C	an..6	N		Nicht genutzt
1056	Version identifier	C	an..9	N		Nicht genutzt
1060	Revision identifier	C	an..6	N		Nicht genutzt

Beispiel:

```
RFF+VA:ABC123'
```

Bez =Bezeichner; Nr = Laufende Segmentnummer im Guide; MaxWdh = Maximale Wiederholung; St = Status (M=Muss/Mandatory, C=Conditional, R=Erforderlich/Required, O=Optional, D=Abhängig von/Dependent, A=Empfohlen/Advised)

COPYRIGHT VDA 2026

Segmente

Nr	Bez	St	MaxWdh	Name
	SG2	O	1	Ultimate Customer Party
55	NAD	M	1	Ultimate customers's name and address

Standard				Implementierung		
Bez	Name	St	Format	St	Format	Anwendung / Bemerkung
3035	Party function code qualifier	M	an..3	M	an..3	**UD** Ultimate customer
C082	Party identification details	C		O		
3039	Party identifier	M	an..35	M	an..35	Unique identifier of business partner (customer number, supplier number, DUNS number, etc.).
1131	Code list identification code	C	an..17	N		Nicht genutzt
3055	Code list responsible agency code	C	an..3	R	an..3	Code specifying the agency responsible for a code list. **16** US, D&B (Dun & Bradstreet Corporation) **86** Assigned by party originating the message **91** Assigned by seller or seller's agent **92** Assigned by buyer or buyer's agent
C058	Name and address	C		N		Nicht genutzt
3124	Name and address description	M	an..35	N		Nicht genutzt
3124	Name and address description	C	an..35	N		Nicht genutzt
3124	Name and address description	C	an..35	N		Nicht genutzt
3124	Name and address description	C	an..35	N		Nicht genutzt
3124	Name and address description	C	an..35	N		Nicht genutzt
C080	Party name	C		O		
3036	Party name	M	an..70	M	an..35	Single text line for specification of a name
3036	Party name	C	an..70	O	an..35	Single text line for specification of a name
3036	Party name	C	an..70	N		Nicht genutzt
3036	Party name	C	an..70	N		Nicht genutzt
3036	Party name	C	an..70	N		Nicht genutzt
3045	Party name format code	C	an..3	N		Nicht genutzt
C059	Street	C		O		
3042	Street and number or post office box identifier	M	an..256	M	an..35	Part of address identifying the location of a building, normally given together with street
3042	Street and number or post office box identifier	C	an..256	O	an..35	see 3042 # 1
3042	Street and number or post office box identifier	C	an..256	N		Nicht genutzt
3042	Street and number or post office box identifier	C	an..256	N		Nicht genutzt
3164	City name	C	an..35	O	an..35	
C819	Country subdivision details	C		O		
3229	Country subdivision identifier	C	an..9	O	an..9	State or region within a country. The use of UN LoCodes is recommended.
1131	Code list identification code	C	an..17	N		Nicht genutzt
3055	Code list responsible agency code	C	an..3	N		Nicht genutzt
3228	Country subdivision name	C	an..70	N		Nicht genutzt
3251	Postal identification code	C	an..17	O	an..17	Identifier of one or more address data properties according to the postal service of the respective country
3207	Country identifier	C	an..3	O	an..3	Provides the country part of an address using a code.

Bez =Bezeichner; Nr = Laufende Segmentnummer im Guide; MaxWdh = Maximale Wiederholung; St = Status (M=Muss/Mandatory, C=Conditional, R=Erforderlich/Required, O=Optional, D=Abhängig von/Dependent, A=Empfohlen/Advised)

COPYRIGHT VDA 2026

Segmente

Standard				Implementierung		
Bez	Name	St	Format	St	Format	Anwendung / Bemerkung
						Use ISO3166 two alpha code.

This segment is required for example in CKD processes or cog wheel process.
The ultimate customer is the final recipient of the goods. For a multi-tier scheduled shipment, it might be necessary to distinguish between the ship-from (e.g. tier 2 supplier), the ship-to (e.g. tier 1 supplier) and the ultimate customer (e.g. OEM's plant or dealer).
Beispiel:

```
NAD+UD+Identifier::92++Name1:Name2+Street1:Street2+City++12345+DE'
```

Bez =Bezeichner; Nr = Laufende Segmentnummer im Guide; MaxWdh = Maximale Wiederholung; St = Status (M=Muss/Mandatory, C=Conditional, R=Erforderlich/Required, O=Optional, D=Abhängig von/Dependent, A=Empfohlen/Advised)

COPYRIGHT VDA 2026

Segmente

Nr	Bez	St	MaxWdh	Name
	SG3	O	1	Fiscal number
56	RFF	M	1	Fiscal number

Standard				Implementierung		
Bez	Name	St	Format	St	Format	Anwendung / Bemerkung
C506	Reference	M		M		
1153	Reference code qualifier	M	an..3	M	an..3	**FC** Fiscal number
1154	Reference identifier	C	an..70	R	an..70	In Spain, the NIF (Número de Identificación Fiscal) must be provided as the fiscal number.
1156	Document line identifier	C	an..6	N		Nicht genutzt
1056	Version identifier	C	an..9	N		Nicht genutzt
1060	Revision identifier	C	an..6	N		Nicht genutzt

Beispiel:

```
RFF+FC:ABC123'
```

Bez =Bezeichner; Nr = Laufende Segmentnummer im Guide; MaxWdh = Maximale Wiederholung; St = Status (M=Muss/Mandatory, C=Conditional, R=Erforderlich/Required, O=Optional, D=Abhängig von/Dependent, A=Empfohlen/Advised)

COPYRIGHT VDA 2026

Segmente

Nr	Bez	St	MaxWdh	Name
	SG3	O	1	VAT registration number
57	RFF	M	1	VAT registration number

Standard				Implementierung		
Bez	Name	St	Format	St	Format	Anwendung / Bemerkung
C506	Reference	M		M		
1153	Reference code qualifier	M	an..3	M	an..3	**VA** VAT registration number
1154	Reference identifier	C	an..70	R	an..70	In Spain, the NIF (Número de Identificación Fiscal) must be provided as the fiscal number.
1156	Document line identifier	C	an..6	N		Nicht genutzt
1056	Version identifier	C	an..9	N		Nicht genutzt
1060	Revision identifier	C	an..6	N		Nicht genutzt

Beispiel:

```
RFF+VA:ABC123'
```

Bez =Bezeichner; Nr = Laufende Segmentnummer im Guide; MaxWdh = Maximale Wiederholung; St = Status (M=Muss/Mandatory, C=Conditional, R=Erforderlich/Required, O=Optional, D=Abhängig von/Dependent, A=Empfohlen/Advised)

COPYRIGHT VDA 2026

Segmente

Nr	Bez	St	MaxWdh	Name
	SG5	O	1	Terms of delivery
58	TOD	M	1	Terms of delivery or transport

Standard				Implementierung		
Bez	Name	St	Format	St	Format	Anwendung / Bemerkung
4055	Delivery or transport terms function code	C	an..3	N		Nicht genutzt
4215	Transport charges payment method code	C	an..3	N		Nicht genutzt
C100	Terms of delivery or transport	C		O		
4053	Delivery or transport terms description code	C	an..3	R	an..3	The list also contains codes that are no longer part of INCOTERMS 2010 and/or 2020, as they are still widely used. **CFR** COST AND FREIGHT ODDC004(1) **CIF** COST INSURANCE AND FREIGHT ODDC004(1) **CIP** CARRIAGE AND INSURANCE PAID TO ODDC004(1) **CPT** CARRIAGE PAID TO ODDC004(1) **DAF** DELIVERED AT FRONTIER ODDC004(1) **DAP** Delivered At Place (insert named place of destination) ODDC004(1) **DAT** Delivered At Terminal (insert named terminal at port or place of destination) ODDC004(1) **DDP** DELIVERED DUTY PAID ODDC004(1) **DDU** DELIVERED DUTY UNPAID ODDC004(1) **DEQ** DELIVERED EX QUAY (DUTY PAID) ODDC004(1) **DES** DELIVERED EX SHIP ODDC004(1) **DPU** Delivered at Place Unloaded ODDC004(1) **EXW** EX WORKS ODDC004(1) **FAS** FREE ALONGSIDE SHIP ODDC004(1) **FCA** FREE CARRIER ODDC004(1) **FOA** FREE ON AIRCRAFT ODDC004(1) **FOB** FREE ON BOARD ODDC004(1) **FOR** FREE ON RAIL ODDC004(1)
1131	Code list identification code	C	an..17	N		Nicht genutzt
3055	Code list responsible agency code	C	an..3	N		Nicht genutzt
4052	Delivery or transport terms description	C	an..70	N		Nicht genutzt
4052	Delivery or transport terms description	C	an..70	N		Nicht genutzt

Beispiel:

```
TOD+++CFR'
```

Bez =Bezeichner; Nr = Laufende Segmentnummer im Guide; MaxWdh = Maximale Wiederholung; St = Status (M=Muss/Mandatory, C=Conditional, R=Erforderlich/Required, O=Optional, D=Abhängig von/Dependent, A=Empfohlen/Advised)

COPYRIGHT VDA 2026

Segmente

Nr	Bez	St	MaxWdh	Name
	SG5	O	1	Terms of delivery
59	LOC	O	1	Incoterms place

Standard				Implementierung		
Bez	Name	St	Format	St	Format	Anwendung / Bemerkung
3227	Location function code qualifier	M	an..3	M	an..3	**1** Place of terms of delivery
C517	Location identification	C		R		
3225	Location identifier	C	an..35	O	an..35	Incoterms place, coded
1131	Code list identification code	C	an..17	N		Nicht genutzt
3055	Code list responsible agency code	C	an..3	N		Nicht genutzt
3224	Location name	C	an..256	O	an..35	Incoterms place, free text
C519	Related location one identification	C		N		Nicht genutzt
3223	First related location identifier	C	an..35	N		Nicht genutzt
1131	Code list identification code	C	an..17	N		Nicht genutzt
3055	Code list responsible agency code	C	an..3	N		Nicht genutzt
3222	First related location name	C	an..70	N		Nicht genutzt
C553	Related location two identification	C		O		
3233	Second related location identifier	C	an..35	O	an..35	Additional location ID
1131	Code list identification code	C	an..17	N		Nicht genutzt
3055	Code list responsible agency code	C	an..3	D	an..3	Code specifying the agency responsible for a code list. Has to be provided if 3233 is used. **10** ODETTE **16** US, D&B (Dun & Bradstreet Corporation) **91** Assigned by seller or seller's agent **92** Assigned by buyer or buyer's agent
3232	Second related location name	C	an..70	O	an..70	Additional location text
5479	Relation code	C	an..3	N		Nicht genutzt

Identification of the point or port of departure, shipment or destination as required under the applicable incoterms.
Beispiel:

LOC+1+:::X++:::X'

Bez =Bezeichner; Nr = Laufende Segmentnummer im Guide; MaxWdh = Maximale Wiederholung; St = Status (M=Muss/Mandatory, C=Conditional, R=Erforderlich/Required, O=Optional, D=Abhängig von/Dependent, A=Empfohlen/Advised)

COPYRIGHT VDA 2026

Segmente

Nr	Bez	St	MaxWdh	Name
	SG5	O	1	Terms of delivery
60	FTX	O	5	Terms of delivery - descriptive text

Standard				Implementierung		
Bez	Name	St	Format	St	Format	Anwendung / Bemerkung
4451	Text subject code qualifier	M	an..3	M	an..3	**AAR** Terms of delivery
4453	Free text function code	C	an..3	N		Nicht genutzt
C107	Text reference	C		O		
4441	Free text description code	M	an..17	M	an..17	Priority of transmission: "Prioritised", "Standard" The client must specify precisely in which situation the value "Prioritised" should be used. **A** Bypass delivery ODDC153(1) **B** Cross docking ODDC153(1) **C** Backorder ODDC153(1) **D** Extra tour ODDC153(1) **P** Prioritised ODDC153(1) **S** Standard ODDC153(1)
1131	Code list identification code	C	an..17	N		Nicht genutzt
3055	Code list responsible agency code	C	an..3	N		Nicht genutzt
C108	Text literal	C		R		
4440	Free text	M	an..512	R	an..128	
4440	Free text	C	an..512	O	an..128	
4440	Free text	C	an..512	N		Nicht genutzt
4440	Free text	C	an..512	N		Nicht genutzt
4440	Free text	C	an..512	N		Nicht genutzt
3453	Language name code	C	an..3	O	an..3	
4447	Free text format code	C	an..3	N		Nicht genutzt

Beispiel:

FTX+AAR++S+X:X+DE'

Bez =Bezeichner; Nr = Laufende Segmentnummer im Guide; MaxWdh = Maximale Wiederholung; St = Status (M=Muss/Mandatory, C=Conditional, R=Erforderlich/Required, O=Optional, D=Abhängig von/Dependent, A=Empfohlen/Advised)

COPYRIGHT VDA 2026

Segmente

Nr	Bez	St	MaxWdh	Name
	SG6	O	1	Means of transport
61	TDT	M	1	Transport information

Standard				Implementierung		
Bez	Name	St	Format	St	Format	Anwendung / Bemerkung
8051	Transport stage code qualifier	M	an..3	M	an..3	Identification of the point or port of departure, shipment or destination as required under the applicable incoterms. **12** At departure **X01** Current transport leg ODDC156(1)
8028	Means of transport journey identifier	C	an..17	C	an..17	Unique reference given by the carrier to a certain journey or departure of a means of transport.
C220	Mode of transport	C		O		
8067	Transport mode name code	C	an..3	R	an..3	Code specifying the name of a mode of transport. Use UN/ECE Recommendation No 19. **10** Maritime transport **20** Rail transport **30** Road transport **40** Air transport **50** Mail **60** Multimodal transport **70** Fixed transport installations **80** Inland water transport
8066	Transport mode name	C	an..17	N		Nicht genutzt
C001	Transport means	C		O		
8179	Transport means description code	C	an..8	R	an..8	**T01** Eurotrailer H 2.6, W 2.48, L 13.6 tarpauline or box ODDC087(1) **T02** Megatrailer H 3.0, W 2.48, L 13.6 tarpauline or box ODDC087(1) **T03** Jumbo swap body L 7.82, H 3.0, W 2.48 m ODDC087(1) **T04** Jumbo trailer pull ODDC087(1) **T05** 7.5 ton ODDC087(1) **T06** VAN / bus ODDC087(1) **T07** Car ODDC087(1) **T08** Aircraft ODDC087(1) **T09** Ocean Vessel ODDC087(1) **T10** Gigaliner ODDC087(1) **T11** Tautliner ODDC087(1) **T12** Railway wagon ODDC087(1) **T13** Gooseneck Chassis ODDC087(1)
1131	Code list identification code	C	an..17	N		Nicht genutzt
3055	Code list responsible agency code	C	an..3	N		Nicht genutzt
8178	Transport means description	C	an..17	N		Nicht genutzt
C040	Carrier	C		N		Nicht genutzt

Bez =Bezeichner; Nr = Laufende Segmentnummer im Guide; MaxWdh = Maximale Wiederholung; St = Status (M=Muss/Mandatory, C=Conditional, R=Erforderlich/Required, O=Optional, D=Abhängig von/Dependent, A=Empfohlen/Advised)

COPYRIGHT VDA 2026

Segmente

Standard				Implementierung		
Bez	Name	St	Format	St	Format	Anwendung / Bemerkung
3127	Carrier identifier	C	an..17	N		Nicht genutzt
1131	Code list identification code	C	an..17	N		Nicht genutzt
3055	Code list responsible agency code	C	an..3	N		Nicht genutzt
3126	Carrier name	C	an..35	N		Nicht genutzt
8101	Transit direction indicator code	C	an..3	N		Nicht genutzt
C401	Excess transportation information	C		O		
8457	Excess transportation reason code	M	an..3	M	an..3	ZZZ is only a placeholder, indicating that DE is assigned status "M". In the message, only the special route number (or similar reference) is transmitted in DE 7130. The responsibilities are to be defined outside of the EDI data exchange. **ZZZ** Mutually defined
8459	Excess transportation responsibility code	M	an..3	M	an..3	**X** Responsibility to be determined
7130	Customer shipment authorisation identifier	C	an..17	R	an..17	Authorisation number
C222	Transport identification	C		N		Nicht genutzt
8213	Transport means identification name identifier	C	an..35	N		Nicht genutzt
1131	Code list identification code	C	an..17	N		Nicht genutzt
3055	Code list responsible agency code	C	an..3	N		Nicht genutzt
8212	Transport means identification name	C	an..70	N		Nicht genutzt
8453	Transport means nationality code	C	an..3	N		Nicht genutzt
8281	Transport means ownership indicator code	C	an..3	N		Nicht genutzt
C003	Power type	C		O		
7041	Power type code	C	an..3	R	an..3	**1** Diesel **2** Diesel and electric **3** Electric **4** Liquid Propane Gas **5** Petrol **6** Petrol and electric **7** Hydrogen **8** Compressed Natural Gas **9** Liquified Natural Gas
1131	Code list identification code	C	an..17	N		Nicht genutzt
3055	Code list responsible agency code	C	an..3	N		Nicht genutzt
7040	Power type description	C	an..17	N		Nicht genutzt
C290	Transport service	C		O		
8462	Transport service identification code	C	an..17	R	an..17	Transport concept ID, type of contract
1131	Code list identification code	C	an..17	N		Nicht genutzt
3055	Code list responsible agency code	C	an..3	O	an..3	**87** Assigned by carrier **91** Assigned by seller or seller's agent **92** Assigned by buyer or buyer's agent
8463	Transport service name	C	an..35	N		Nicht genutzt
8464	Transport service description	C	an..256	N		Nicht genutzt

Beispiel:

Bez =Bezeichner; Nr = Laufende Segmentnummer im Guide; MaxWdh = Maximale Wiederholung; St = Status (M=Muss/Mandatory, C=Conditional, R=Erforderlich/Required, O=Optional, D=Abhängig von/Dependent, A=Empfohlen/Advised)

COPYRIGHT VDA 2026

Segmente

```
TDT+12++20++++ZZZ:X:X+++1+X::91'
```

Bez =Bezeichner; Nr = Laufende Segmentnummer im Guide; MaxWdh = Maximale Wiederholung; St = Status (M=Muss/Mandatory, C=Conditional, R=Erforderlich/Required, O=Optional, D=Abhängig von/Dependent, A=Empfohlen/Advised)

COPYRIGHT VDA 2026

Segmente

Nr	Bez	St	MaxWdh	Name
	SG6	O	1	Means of transport
62	TMD	O	1	Transport movement type

Standard				Implementierung			
Bez	Name	St	Format	St	Format	Anwendung / Bemerkung	
C219	Movement type	C		R			
8335	Movement type description code	C	an..3	R	an..3	Transport mode **X01** Full truck load - with separate tender ODDC166(1) **X02** Full truck load - within the scope of area contract freight forwarder ODDC166(1) **X03** Milk run during unloading - with separate tender, direct contract ODDC166(1) **X04** Milk run during unloading - within the scope of area contract freight forwarder ODDC166(1) **X05** Distribution by area contract freight forwarder ODDC166(1) **X06** Milk run during loading - with separate tender, direct contract ODDC166(1) **X07** Milk run during loading - within the scope of area contract freight forwarder ODDC166(1) **X08** Milk run during loading and unloading - with separate tender, direct contract ODDC166(1) **X09** Milk run during loading and unloading - within the scope of area contract freight forwarder ODDC166(1) **X10** Full Truck Load - with separate tender transport leg ship-from to consolidation centre / cross-dock ODDC166(1) **X11** Full Truck Load - with separate tender for transport leg cros-dock to cross-dock ODDC166(1) **X12** Full Truck Load - with separate tender for transport leg cross-dock to ship-to ODDC166(1) **X13** Full Container Load - with separate tender from ship-from to ship-to ODDC166(1) **X14** Less than Full Container Load - with separate tender for transport leg from ship-from to consolidation centre / cross-dock ODDC166(1) **X15** Less than Full Container Load - with separate tender for transport leg cross-dock to cross-dock ODDC166(1) **X16** Less than Full Container Load - with separate tender for transport leg cross-dock to ship-to ODDC166(1) **X17** Courier Express Parcel (CEP) ODDC166(1) **X18** Special transport with frame contract ODDC166(1) **X19** Special transport spot market ODDC166(1)
8334	Movement type description	C	an..35	N		Nicht genutzt	
	Equipment plan description	C	an..26	O	an..26	Loading sequence of a shipment on a means of transport (1	

Bez =Bezeichner; Nr = Laufende Segmentnummer im Guide; MaxWdh = Maximale Wiederholung; St = Status (M=Muss/Mandatory, C=Conditional, R=Erforderlich/Required, O=Optional, D=Abhängig von/Dependent, A=Empfohlen/Advised)

COPYRIGHT VDA 2026

Segmente

Standard				Implementierung		
Bez	Name	St	Format	St	Format	Anwendung / Bemerkung
8332						to 99)
8341	Haulage arrangements code	C	an..3	N		Nicht genutzt

Beispiel:

```
TMD+X01+1'
```

Bez =Bezeichner; Nr = Laufende Segmentnummer im Guide; MaxWdh = Maximale Wiederholung; St = Status (M=Muss/Mandatory, C=Conditional, R=Erforderlich/Required, O=Optional, D=Abhängig von/Dependent, A=Empfohlen/Advised)

COPYRIGHT VDA 2026

Segmente

Nr	Bez	St	MaxWdh	Name
	SG7	O	1	Place of departure
63	LOC	M	1	Current place of departure

Standard				Implementierung		
Bez	Name	St	Format	St	Format	Anwendung / Bemerkung
3227	Location function code qualifier	M	an..3	M	an..3	**5** Place of departure
C517	Location identification	C		R		
3225	Location identifier	C	an..35	O	an..35	Location ID
1131	Code list identification code	C	an..17	N		Nicht genutzt
3055	Code list responsible agency code	C	an..3	O	an..3	
3224	Location name	C	an..256	O	an..256	Location (Text)
C519	Related location one identification	C		N		Nicht genutzt
3223	First related location identifier	C	an..35	N		Nicht genutzt
1131	Code list identification code	C	an..17	N		Nicht genutzt
3055	Code list responsible agency code	C	an..3	N		Nicht genutzt
3222	First related location name	C	an..70	N		Nicht genutzt
C553	Related location two identification	C		O		
3233	Second related location identifier	C	an..35	O	an..35	Additional location ID
1131	Code list identification code	C	an..17	N		Nicht genutzt
3055	Code list responsible agency code	C	an..3	D	an..3	Code specifying the agency responsible for a code list. Has to be provided if 3233 is used. **10** ODETTE **16** US, D&B (Dun & Bradstreet Corporation) **91** Assigned by seller or seller's agent **92** Assigned by buyer or buyer's agent
3232	Second related location name	C	an..70	O	an..70	Additional location text
5479	Relation code	C	an..3	N		Nicht genutzt

This segment identifies the Shipping location of the current transport leg.
The segment should be used only in scenarios where the supplier has to organise the transport and has to communicate details of the transport chain to the customer or goods receiver.
Beispiel:

LOC+5+X:::X++:::X'

Bez =Bezeichner; Nr = Laufende Segmentnummer im Guide; MaxWdh = Maximale Wiederholung; St = Status (M=Muss/Mandatory, C=Conditional, R=Erforderlich/Required, O=Optional, D=Abhängig von/Dependent, A=Empfohlen/Advised)

COPYRIGHT VDA 2026

Segmente

Nr	Bez	St	MaxWdh	Name
	SG7	O	1	Place of departure
64	DTM	O	1	Required departure date and time for this transport leg

Standard				Implementierung		
Bez	Name	St	Format	St	Format	Anwendung / Bemerkung
C507	Date/time/period	M		M		
2005	Date or time or period function code qualifier	M	an..3	M	an..3	**133** Transport means departure date/time, estimated
2380	Date or time or period text	C	an..35	R	n..17	Required departure date and time for this transport leg
2379	Date or time or period format code	C	an..3	R	an..3	**102** CCYYMMDD **203** CCYYMMDDHHMM **205** CCYYMMDDHHMMZHHMM

Beispiel:

```
DTM+133:12345678901234567:102'
```

Bez =Bezeichner; Nr = Laufende Segmentnummer im Guide; MaxWdh = Maximale Wiederholung; St = Status (M=Muss/Mandatory, C=Conditional, R=Erforderlich/Required, O=Optional, D=Abhängig von/Dependent, A=Empfohlen/Advised)

COPYRIGHT VDA 2026

Segmente

Nr	Bez	St	MaxWdh	Name
	SG7	O	1	Place of arrival
65	LOC	M	1	Current place of arrival

Standard				Implementierung		
Bez	Name	St	Format	St	Format	Anwendung / Bemerkung
3227	Location function code qualifier	M	an..3	M	an..3	**60** Place of arrival
C517	Location identification	C		R		
3225	Location identifier	C	an..35	O	an..35	Location ID
1131	Code list identification code	C	an..17	N		Nicht genutzt
3055	Code list responsible agency code	C	an..3	O	an..3	
3224	Location name	C	an..256	O	an..256	Location (Text)
C519	Related location one identification	C		O		Can be used to identify the place of discharge for this transport leg
3223	First related location identifier	C	an..35	O	an..35	Place of discharge ID
1131	Code list identification code	C	an..17	N		Nicht genutzt
3055	Code list responsible agency code	C	an..3	O	an..3	
3222	First related location name	C	an..70	O	an..70	Place of discharge (text)
C553	Related location two identification	C		O		
3233	Second related location identifier	C	an..35	O	an..35	Additional location ID
1131	Code list identification code	C	an..17	N		Nicht genutzt
3055	Code list responsible agency code	C	an..3	D	an..3	Code specifying the agency responsible for a code list. Has to be provided if 3233 is used. **10** ODETTE **16** US, D&B (Dun & Bradstreet Corporation) **91** Assigned by seller or seller's agent **92** Assigned by buyer or buyer's agent
3232	Second related location name	C	an..70	O	an..70	Additional location text
5479	Relation code	C	an..3	N		Nicht genutzt

This segment identifies the arrival location of the current transport leg.
The segment group should be used only in scenarios where the supplier has to organise the transport and has to communicate details of the transport chain to the customer or goods receiver.
Beispiel:

LOC+60+:::X+:::X+:::X'

Bez =Bezeichner; Nr = Laufende Segmentnummer im Guide; MaxWdh = Maximale Wiederholung; St = Status (M=Muss/Mandatory, C=Conditional, R=Erforderlich/Required, O=Optional, D=Abhängig von/Dependent, A=Empfohlen/Advised)

COPYRIGHT VDA 2026

Segmente

Nr	Bez	St	MaxWdh	Name
	SG7	O	1	Place of arrival
66	DTM	O	1	Required arrival date and time for this transport leg

Standard				Implementierung		
Bez	Name	St	Format	St	Format	Anwendung / Bemerkung
C507	Date/time/period	M		M		
2005	Date or time or period function code qualifier	M	an..3	M	an..3	**132** Transport means arrival date time, estimated
2380	Date or time or period text	C	an..35	R	n..17	Required arrival date and time for this transport leg
2379	Date or time or period format code	C	an..3	R	an..3	**102** CCYYMMDD **203** CCYYMMDDHHMM **205** CCYYMMDDHHMMZHHMM

Beispiel:

```
DTM+132:12345678901234567:102'
```

Bez =Bezeichner; Nr = Laufende Segmentnummer im Guide; MaxWdh = Maximale Wiederholung; St = Status (M=Muss/Mandatory, C=Conditional, R=Erforderlich/Required, O=Optional, D=Abhängig von/Dependent, A=Empfohlen/Advised)

COPYRIGHT VDA 2026

Segmente

Nr	Bez	St	MaxWdh	Name
	SG6	O	1	Transport details of the main carriage
67	TDT	M	1	Transport details of the main carriage

Standard				Implementierung		
Bez	Name	St	Format	St	Format	Anwendung / Bemerkung
8051	Transport stage code qualifier	M	an..3	M	an..3	**20** Main-carriage transport
8028	Means of transport journey identifier	C	an..17	O	an..17	Unique reference number assigned by the carrier to a certain route or departure of a transport vehicle.
C220	Mode of transport	C		O		
8067	Transport mode name code	C	an..3	O	an..3	Code of mode of transport. Use UN/ECE Recommendation No 19. **10** Maritime transport **20** Rail transport **30** Road transport **40** Air transport
8066	Transport mode name	C	an..17	N		Nicht genutzt
C001	Transport means	C		N		Nicht genutzt
8179	Transport means description code	C	an..8	N		Nicht genutzt
1131	Code list identification code	C	an..17	N		Nicht genutzt
3055	Code list responsible agency code	C	an..3	N		Nicht genutzt
8178	Transport means description	C	an..17	N		Nicht genutzt
C040	Carrier	C		O		
3127	Carrier identifier	C	an..17	O	an..17	
1131	Code list identification code	C	an..17	N		Nicht genutzt
3055	Code list responsible agency code	C	an..3	N		Nicht genutzt
3126	Carrier name	C	an..35	N		Nicht genutzt
8101	Transit direction indicator code	C	an..3	N		Nicht genutzt
C401	Excess transportation information	C		O		
8457	Excess transportation reason code	M	an..3	M	an..3	ZZZ is only a placeholder, indicating that DE is assigned status "M". In the message, only the special route number (or similar reference) is transmitted in DE 7130. The responsibilities are to be defined outside of the EDI data exchange. **ZZZ** Mutually defined
8459	Excess transportation responsibility code	M	an..3	M	an..3	**X** Responsibility to be determined
7130	Customer shipment authorisation identifier	C	an..17	R	an..17	Authorisation number
C222	Transport identification	C		O		
8213	Transport means identification name identifier	C	an..35	O	an..35	Identifier of a means of transport, like license plate etc.
1131	Code list identification code	C	an..17	N		Nicht genutzt
3055	Code list responsible agency code	C	an..3	O	an..3	
8212	Transport means identification name	C	an..70	N		Nicht genutzt
8453	Transport means nationality code	C	an..3	O	a2	Provides the country using a code. Use ISO3166 two alpha code.

Bez =Bezeichner; Nr = Laufende Segmentnummer im Guide; MaxWdh = Maximale Wiederholung; St = Status (M=Muss/Mandatory, C=Conditional, R=Erforderlich/Required, O=Optional, D=Abhängig von/Dependent, A=Empfohlen/Advised)

COPYRIGHT VDA 2026

Segmente

Standard				Implementierung		
Bez	Name	St	Format	St	Format	Anwendung / Bemerkung
8281	Transport means ownership indicator code	C	an..3	N		Nicht genutzt
C003	Power type	C		N		Nicht genutzt
7041	Power type code	C	an..3	N		Nicht genutzt
1131	Code list identification code	C	an..17	N		Nicht genutzt
3055	Code list responsible agency code	C	an..3	N		Nicht genutzt
7040	Power type description	C	an..17	N		Nicht genutzt
C290	Transport service	C		N		Nicht genutzt
8462	Transport service identification code	C	an..17	N		Nicht genutzt
1131	Code list identification code	C	an..17	N		Nicht genutzt
3055	Code list responsible agency code	C	an..3	N		Nicht genutzt
8463	Transport service name	C	an..35	N		Nicht genutzt
8464	Transport service description	C	an..256	N		Nicht genutzt

In certain scenarios the customer requires an alternative transport regime (main carriage), e.g to be able to react flexible in bottleneck situations. The supplier organises the transport accordingly. In this scenario the TDT with qualifier 20 and following segments are used to transmit the transport details of the main carriage.
Beispiel:

TDT+20++20++++ZZZ:X:X+::91::DE'

Bez =Bezeichner; Nr = Laufende Segmentnummer im Guide; MaxWdh = Maximale Wiederholung; St = Status (M=Muss/Mandatory, C=Conditional, R=Erforderlich/Required, O=Optional, D=Abhängig von/Dependent, A=Empfohlen/Advised)

COPYRIGHT VDA 2026

Segmente

Nr	Bez	St	MaxWdh	Name
	SG7	O	10	Place of departure
68	LOC	R	1	Current place of departure

Standard				Implementierung		
Bez	Name	St	Format	St	Format	Anwendung / Bemerkung
3227	Location function code qualifier	M	an..3	M	an..3	**5** Place of departure
C517	Location identification	C		R		
3225	Location identifier	C	an..35	O	an..35	Location ID
1131	Code list identification code	C	an..17	N		Nicht genutzt
3055	Code list responsible agency code	C	an..3	O	an..3	
3224	Location name	C	an..256	O	an..256	Location (Text)
C519	Related location one identification	C		N		Nicht genutzt
3223	First related location identifier	C	an..35	N		Nicht genutzt
1131	Code list identification code	C	an..17	N		Nicht genutzt
3055	Code list responsible agency code	C	an..3	N		Nicht genutzt
3222	First related location name	C	an..70	N		Nicht genutzt
C553	Related location two identification	C		O		
3233	Second related location identifier	C	an..35	O	an..35	Additional location ID
1131	Code list identification code	C	an..17	N		Nicht genutzt
3055	Code list responsible agency code	C	an..3	D	an..3	Code specifying the agency responsible for a code list. Has to be provided if 3233 is used. **10** ODETTE **16** US, D&B (Dun & Bradstreet Corporation) **91** Assigned by seller or seller's agent **92** Assigned by buyer or buyer's agent
3232	Second related location name	C	an..70	O	an..70	Additional location text
5479	Relation code	C	an..3	N		Nicht genutzt

Beispiel:

```
LOC+5+X:::X++:::X'
```

Bez =Bezeichner; Nr = Laufende Segmentnummer im Guide; MaxWdh = Maximale Wiederholung; St = Status (M=Muss/Mandatory, C=Conditional, R=Erforderlich/Required, O=Optional, D=Abhängig von/Dependent, A=Empfohlen/Advised)

COPYRIGHT VDA 2026

Segmente

Nr	Bez	St	MaxWdh	Name
	SG7	O	10	Place of departure
69	DTM	O	1	Departure date and time

Standard				Implementierung		
Bez	Name	St	Format	St	Format	Anwendung / Bemerkung
C507	Date/time/period	M		M		
2005	Date or time or period function code qualifier	M	an..3	M	an..3	**136** Transport means departure date time, actual
2380	Date or time or period text	C	an..35	R	an..35	Departure date / time
2379	Date or time or period format code	C	an..3	R	an..3	**102** CCYYMMDD **203** CCYYMMDDHHMM **205** CCYYMMDDHHMMZHHMM

Beispiel:

```
DTM+136:999999999999:102'
```

Bez =Bezeichner; Nr = Laufende Segmentnummer im Guide; MaxWdh = Maximale Wiederholung; St = Status (M=Muss/Mandatory, C=Conditional, R=Erforderlich/Required, O=Optional, D=Abhängig von/Dependent, A=Empfohlen/Advised)

COPYRIGHT VDA 2026

Segmente

Nr	Bez	St	MaxWdh	Name
	SG7	O	10	Place of arrival
70	LOC	M	1	Current place of arrival

Standard				Implementierung		
Bez	Name	St	Format	St	Format	Anwendung / Bemerkung
3227	Location function code qualifier	M	an..3	M	an..3	**60** Place of arrival
C517	Location identification	C		R		
3225	Location identifier	C	an..35	O	an..35	Location ID
1131	Code list identification code	C	an..17	N		Nicht genutzt
3055	Code list responsible agency code	C	an..3	O	an..3	
3224	Location name	C	an..256	O	an..256	Location (Text)
C519	Related location one identification	C		O		Can be used to identify the place of discharge for this transport leg
3223	First related location identifier	C	an..35	O	an..35	Place of discharge ID
1131	Code list identification code	C	an..17	N		Nicht genutzt
3055	Code list responsible agency code	C	an..3	O	an..3	
3222	First related location name	C	an..70	O	an..70	Place of discharge (text)
C553	Related location two identification	C		O		
3233	Second related location identifier	C	an..35	O	an..35	Additional location ID
1131	Code list identification code	C	an..17	N		Nicht genutzt
3055	Code list responsible agency code	C	an..3	D	an..3	Code specifying the agency responsible for a code list. Has to be provided if 3233 is used. **10** ODETTE **16** US, D&B (Dun & Bradstreet Corporation) **91** Assigned by seller or seller's agent **92** Assigned by buyer or buyer's agent
3232	Second related location name	C	an..70	O	an..70	Additional location text
5479	Relation code	C	an..3	N		Nicht genutzt

Beispiel:

LOC+60+:::X+:::X+:::X'

Bez =Bezeichner; Nr = Laufende Segmentnummer im Guide; MaxWdh = Maximale Wiederholung; St = Status (M=Muss/Mandatory, C=Conditional, R=Erforderlich/Required, O=Optional, D=Abhängig von/Dependent, A=Empfohlen/Advised)

COPYRIGHT VDA 2026

Segmente

Nr	Bez	St	MaxWdh	Name
	SG7	O	10	Place of arrival
71	DTM	O	10	Arrivaldate and time

Standard				Implementierung		
Bez	Name	St	Format	St	Format	Anwendung / Bemerkung
C507	Date/time/period	M		M		
2005	Date or time or period function code qualifier	M	an..3	M	an..3	**178** Transport means arrival date time, actual
2380	Date or time or period text	C	an..35	R	an..35	Date / time
2379	Date or time or period format code	C	an..3	R	an..3	**102** CCYYMMDD **203** CCYYMMDDHHMM **205** CCYYMMDDHHMMZHHMM

Beispiel:

```
DTM+178:999999999999:102'
```

Bez =Bezeichner; Nr = Laufende Segmentnummer im Guide; MaxWdh = Maximale Wiederholung; St = Status (M=Muss/Mandatory, C=Conditional, R=Erforderlich/Required, O=Optional, D=Abhängig von/Dependent, A=Empfohlen/Advised)

COPYRIGHT VDA 2026

Segmente

Nr	Bez	St	MaxWdh	Name
	SG8	O	1	Information for the freight forwarder
72	EQD	M	1	Equipment details

Standard				Implementierung		
Bez	Name	St	Format	St	Format	Anwendung / Bemerkung
8053	Equipment type code qualifier	M	an..3	M	an..3	This segment is used as trigger only. Since UN/EDIFACT syntax rules require at least one data element in a segment, a dummy code has to be transmitted. **X01** Trigger ODDC090(1)
C237	Equipment identification	C		N		Nicht genutzt
8260	Equipment identifier	C	an..17	N		Nicht genutzt
1131	Code list identification code	C	an..17	N		Nicht genutzt
3055	Code list responsible agency code	C	an..3	N		Nicht genutzt
3207	Country identifier	C	an..3	N		Nicht genutzt
C224	Equipment size and type	C		N		Nicht genutzt
8155	Equipment size and type description code	C	an..10	N		Nicht genutzt
1131	Code list identification code	C	an..17	N		Nicht genutzt
3055	Code list responsible agency code	C	an..3	N		Nicht genutzt
8154	Equipment size and type description	C	an..35	N		Nicht genutzt
8077	Equipment supplier code	C	an..3	N		Nicht genutzt
8249	Equipment status code	C	an..3	N		Nicht genutzt
8169	Full or empty indicator code	C	an..3	N		Nicht genutzt
4233	Marking instructions code	C	an..3	N		Nicht genutzt

Beispiel:

```
EQD+X01'
```

Bez =Bezeichner; Nr = Laufende Segmentnummer im Guide; MaxWdh = Maximale Wiederholung; St = Status (M=Muss/Mandatory, C=Conditional, R=Erforderlich/Required, O=Optional, D=Abhängig von/Dependent, A=Empfohlen/Advised)

COPYRIGHT VDA 2026

Segmente

Nr	Bez	St	MaxWdh	Name
	SG9	R	10	Information for the freight forwarder
73	HAN	M	1	Handling instructions

Standard				Implementierung		
Bez	Name	St	Format	St	Format	Anwendung / Bemerkung
C524	Handling instructions	C		R		
4079	Handling instruction description code	C	an..3	R	an..3	Codeliste to special transport conditions **101** Please advise shipment @ telephone number: ... (text) telephone number for advice 4441(3) **107** Delivery requires truck with lifting ramp/platform 4441(3) **108** Shipment to be delivered without directly unloading 4441(3) **109** Handle with care, sensitive goods! 4441(3) **110** Goods to be transported lying 4441(3) **113** To be transported in advised temperature range! 4441(3) **125** Direct pick-up 4441(3) **126** Lifting platform required 4441(3) **127** Loading / unloading from the rear 4441(3) **128** Loading / unloading from the side (both sides) 4441(3) **129** Loading / unloading from the side (left side) 4441(3) **130** Loading / unloading from the side (right side) 4441(3) **131** Loading / unloading with crane 4441(3) **132** Self loading / self unloading 4441(3) **133** Height restriction 4441(3) **134** Fork lift required 4441(3) **135** Anti slip matting required 4441(3) **136** No transport means with loaded dangerous goods 4441(3) **137** Exchange of loading means 4441(3) **138** Only self-propelled truck 4441(3) **139** 7,5 Ton 4441(3) **140** Tautliner 4441(3) **141** Detailed instructions in the free text (FTX segment) 4441(3)
1131	Code list identification code	C	an..17	N		Nicht genutzt
3055	Code list responsible agency code	C	an..3	R	an..3	**10** ODETTE

Bez =Bezeichner; Nr = Laufende Segmentnummer im Guide; MaxWdh = Maximale Wiederholung; St = Status (M=Muss/Mandatory, C=Conditional, R=Erforderlich/Required, O=Optional, D=Abhängig von/Dependent, A=Empfohlen/Advised)

COPYRIGHT VDA 2026

Segmente

Standard				Implementierung		
Bez	Name	St	Format	St	Format	Anwendung / Bemerkung
4078	Handling instruction description	C	an..512	O	an..512	This code is related to the instruction in DE 4079 . **COL** Collection **DEL** Delivery
C218	Hazardous material	C		N		Nicht genutzt
7419	Hazardous material category name code	C	an..7	N		Nicht genutzt
1131	Code list identification code	C	an..17	N		Nicht genutzt
3055	Code list responsible agency code	C	an..3	N		Nicht genutzt
7418	Hazardous material category name	C	an..35	N		Nicht genutzt

Beispiel:

```
HAN+101::10:COL'
```

Bez =Bezeichner; Nr = Laufende Segmentnummer im Guide; MaxWdh = Maximale Wiederholung; St = Status (M=Muss/Mandatory, C=Conditional, R=Erforderlich/Required, O=Optional, D=Abhängig von/Dependent, A=Empfohlen/Advised)

COPYRIGHT VDA 2026

Segmente

Nr	Bez	St	MaxWdh	Name
	SG9	R	10	Information for the freight forwarder
74	FTX	O	1	Consignment documentary instruction as free text

Standard				Implementierung		
Bez	Name	St	Format	St	Format	Anwendung / Bemerkung
4451	Text subject code qualifier	M	an..3	M	an..3	**SIC** Consignment documentary instruction
4453	Free text function code	C	an..3	N		Nicht genutzt
C107	Text reference	C		N		Nicht genutzt
4441	Free text description code	M	an..17	N		Nicht genutzt
1131	Code list identification code	C	an..17	N		Nicht genutzt
3055	Code list responsible agency code	C	an..3	N		Nicht genutzt
C108	Text literal	C		R		
4440	Free text	M	an..512	M	an..512	
4440	Free text	C	an..512	O	an..512	
4440	Free text	C	an..512	N		Nicht genutzt
4440	Free text	C	an..512	N		Nicht genutzt
4440	Free text	C	an..512	N		Nicht genutzt
3453	Language name code	C	an..3	N		Nicht genutzt
4447	Free text format code	C	an..3	N		Nicht genutzt

Beispiel:

```
FTX+SIC+++Ladungssicherung notwendig:Ladungssicherung notwendig'
```

Bez =Bezeichner; Nr = Laufende Segmentnummer im Guide; MaxWdh = Maximale Wiederholung; St = Status (M=Muss/Mandatory, C=Conditional, R=Erforderlich/Required, O=Optional, D=Abhängig von/Dependent, A=Empfohlen/Advised)

COPYRIGHT VDA 2026

Segmente

Nr	Bez	St	MaxWdh	Name
	SG9	R	10	Information for the freight forwarder
75	FTX	O	1	Other service information

Standard				Implementierung		
Bez	Name	St	Format	St	Format	Anwendung / Bemerkung
4451	Text subject code qualifier	M	an..3	M	an..3	**OSI** Other service information
4453	Free text function code	C	an..3	N		Nicht genutzt
C107	Text reference	C		N		Nicht genutzt
4441	Free text description code	M	an..17	N		Nicht genutzt
1131	Code list identification code	C	an..17	N		Nicht genutzt
3055	Code list responsible agency code	C	an..3	N		Nicht genutzt
C108	Text literal	C		R		
4440	Free text	M	an..512	M	an..512	
4440	Free text	C	an..512	O	an..512	
4440	Free text	C	an..512	N		Nicht genutzt
4440	Free text	C	an..512	N		Nicht genutzt
4440	Free text	C	an..512	N		Nicht genutzt
3453	Language name code	C	an..3	N		Nicht genutzt
4447	Free text format code	C	an..3	N		Nicht genutzt

Beispiel:

```
FTX+OSI+++Other service information:Other service information'
```

Bez =Bezeichner; Nr = Laufende Segmentnummer im Guide; MaxWdh = Maximale Wiederholung; St = Status (M=Muss/Mandatory, C=Conditional, R=Erforderlich/Required, O=Optional, D=Abhängig von/Dependent, A=Empfohlen/Advised)

COPYRIGHT VDA 2026

Segmente

Nr	Bez	St	MaxWdh	Name
	SG11	O	9999	Despatch control line / List of handling unit groups
				The maximum number of SG-CPS in a message shall not exceed 9999.
76	CPS	M	1	Consignment packing sequence

Standard				Implementierung		
Bez	Name	St	Format	St	Format	Anwendung / Bemerkung
7164	Hierarchical structure level identifier	M	an..35	R	n..6	Line Item Number line number Incremented counter generated by message sender, assigned to a packaging group in the message. We recommend starting at 1.
7166	Hierarchical structure parent identifier	C	an..35	N		Nicht genutzt
7075	Packaging level code	C	an..3	R	an..3	Code specifying a level of packaging. **3** Outer **2** Intermediate

The specific representation of packaging hierarchies is described in detail in VDA 4987 Parts 1 to 4 and is also applicable here.
With SG-CPS identified as handling unit / intermediate packaging level, there is no article item (SG-LIN), as these are always preceded by the inner packaging.
The packaging structure must be entered in the message from the outside inwards, i.e. handling unit, followed by packaging units; main packaging followed by packaging aids.
If different packaging materials have the same properties (same packaging type, same packaging aids (number and type), same volume, same part number, same batch number ...) they should be combined into one packaging group.
For each outer packaging, the number/identifier of the packaging units at the next level are listed. This applies accordingly to any intermediate packaging units.
Beispiel:

```
CPS+9++3'
```

Bez =Bezeichner; Nr = Laufende Segmentnummer im Guide; MaxWdh = Maximale Wiederholung; St = Status (M=Muss/Mandatory, C=Conditional, R=Erforderlich/Required, O=Optional, D=Abhängig von/Dependent, A=Empfohlen/Advised)

COPYRIGHT VDA 2026

Segmente

Nr	Bez	St	MaxWdh	Name
	SG12	R	1	Handling unit group details
77	PAC	M	1	Package

Standard				Implementierung		
Bez	Name	St	Format	St	Format	Anwendung / Bemerkung
7224	Package quantity	C	n..8	R	n..6	Number Of Identical Handling Units Actual number of packages or handling units, e.g. belonging to a group of packages. Considered to be a number of identical packages.
C531	Packaging details	C		R		
7075	Packaging level code	C	an..3	N		Nicht genutzt
7233	Packaging related description code	C	an..3	R	an..3	**35** Type of package
7073	Packaging terms and conditions code	C	an..3	N		Nicht genutzt
C202	Package type	C		R		
7065	Package type description code	C	an..17	R	an..17	Code of packaging designation (packaging code of customer).
1131	Code list identification code	C	an..17	N		Nicht genutzt
3055	Code list responsible agency code	C	an..3	O	an..3	Code List Responsible Agency Code specifying the agency responsible for a code list. **92** Assigned by buyer or buyer's agent
7064	Type of packages	C	an..35	N		Nicht genutzt
C402	Package type identification	C		O		
7077	Description format code	M	an..3	M	an..3	**X** Semi-structured (code + text)
7064	Type of packages	M	an..35	M	an..35	Designation of packaging (packaging code of supplier). According to EDIFACT, this element is mandatory. If this DE group is to be used and the supplier has not defined internal packaging codes, enter the same value as in DE 7064 for VDA code.
7143	Item type identification code	C	an..3	O	an..3	**SA** Supplier's article number
7064	Type of packages	C	an..35	O	an..35	Designation of packaging, VDA code list (see separate documentation)
7143	Item type identification code	C	an..3	N		Nicht genutzt
C532	Returnable package details	C		N		Nicht genutzt
8395	Returnable package freight payment responsibility code	C	an..3	N		Nicht genutzt
8393	Returnable package load contents code	C	an..3	N		Nicht genutzt

Beispiel:

```
PAC+1+:35+4A::92+X:080607::080607'
```

Bez =Bezeichner; Nr = Laufende Segmentnummer im Guide; MaxWdh = Maximale Wiederholung; St = Status (M=Muss/Mandatory, C=Conditional, R=Erforderlich/Required, O=Optional, D=Abhängig von/Dependent, A=Empfohlen/Advised)

COPYRIGHT VDA 2026

Segmente

Nr	Bez	St	MaxWdh	Name
	SG12	R	1	Handling unit group details
78	MEA	O	1	Length

Standard				Implementierung		
Bez	Name	St	Format	St	Format	Anwendung / Bemerkung
6311	Measurement purpose code qualifier	M	an..3	M	an..3	**AAZ** Handling unit measurement
C502	Measurement details	C		C		
6313	Measured attribute code	C	an..3	C	an..3	**LN** Length
6321	Measurement significance code	C	an..3	N		Nicht genutzt
6155	Non-discrete measurement name code	C	an..17	N		Nicht genutzt
6154	Non-discrete measurement name	C	an..70	N		Nicht genutzt
C174	Value/range	C		R		
6411	Measurement unit code	C	an..8	R	an..8	**MMT** millimetre
6314	Measure	C	an..18	R	n..5	Length
6162	Range minimum quantity	C	n..18	N		Nicht genutzt
6152	Range maximum quantity	C	n..18	N		Nicht genutzt
6432	Significant digits quantity	C	n..2	N		Nicht genutzt
7383	Surface or layer code	C	an..3	N		Nicht genutzt

Length dimension of the package
Beispiel:

```
MEA+AAZ+LN+MMT:9'
```

Bez =Bezeichner; Nr = Laufende Segmentnummer im Guide; MaxWdh = Maximale Wiederholung; St = Status (M=Muss/Mandatory, C=Conditional, R=Erforderlich/Required, O=Optional, D=Abhängig von/Dependent, A=Empfohlen/Advised)

COPYRIGHT VDA 2026

Segmente

Nr	Bez	St	MaxWdh	Name
	SG12	R	1	Handling unit group details
79	MEA	O	1	Width

Standard				Implementierung		
Bez	Name	St	Format	St	Format	Anwendung / Bemerkung
6311	Measurement purpose code qualifier	M	an..3	M	an..3	**AAZ** Handling unit measurement
C502	Measurement details	C		R		
6313	Measured attribute code	C	an..3	R	an..3	**WD** Width dimension
6321	Measurement significance code	C	an..3	N		Nicht genutzt
6155	Non-discrete measurement name code	C	an..17	N		Nicht genutzt
6154	Non-discrete measurement name	C	an..70	N		Nicht genutzt
C174	Value/range	C		R		
6411	Measurement unit code	C	an..8	R	an..8	**MMT** millimetre
6314	Measure	C	an..18	R	n..12	Width
6162	Range minimum quantity	C	n..18	N		Nicht genutzt
6152	Range maximum quantity	C	n..18	N		Nicht genutzt
6432	Significant digits quantity	C	n..2	N		Nicht genutzt
7383	Surface or layer code	C	an..3	N		Nicht genutzt

Width dimension of the package
Beispiel:

```
MEA+AAZ+WD+MMT:9'
```

Bez =Bezeichner; Nr = Laufende Segmentnummer im Guide; MaxWdh = Maximale Wiederholung; St = Status (M=Muss/Mandatory, C=Conditional, R=Erforderlich/Required, O=Optional, D=Abhängig von/Dependent, A=Empfohlen/Advised)

COPYRIGHT VDA 2026

Segmente

Nr	Bez	St	MaxWdh	Name
	SG12	R	1	Handling unit group details
80	MEA	O	1	Height

Standard				Implementierung		
Bez	Name	St	Format	St	Format	Anwendung / Bemerkung
6311	Measurement purpose code qualifier	M	an..3	M	an..3	**AAZ** Handling unit measurement
C502	Measurement details	C		R		
6313	Measured attribute code	C	an..3	R	an..3	**HT** Height dimension
6321	Measurement significance code	C	an..3	N		Nicht genutzt
6155	Non-discrete measurement name code	C	an..17	N		Nicht genutzt
6154	Non-discrete measurement name	C	an..70	N		Nicht genutzt
C174	Value/range	C		R		
6411	Measurement unit code	C	an..8	R	an..3	**MMT** millimetre
6314	Measure	C	an..18	R	n..5	
6162	Range minimum quantity	C	n..18	N		Nicht genutzt
6152	Range maximum quantity	C	n..18	N		Nicht genutzt
6432	Significant digits quantity	C	n..2	N		Nicht genutzt
7383	Surface or layer code	C	an..3	N		Nicht genutzt

Height dimension of the package
Beispiel:

```
MEA+AAZ+HT+MMT:9'
```

Bez =Bezeichner; Nr = Laufende Segmentnummer im Guide; MaxWdh = Maximale Wiederholung; St = Status (M=Muss/Mandatory, C=Conditional, R=Erforderlich/Required, O=Optional, D=Abhängig von/Dependent, A=Empfohlen/Advised)

COPYRIGHT VDA 2026

Segmente

Nr	Bez	St	MaxWdh	Name
	SG12	R	1	Handling unit group details
81	MEA	O	1	Volume

Standard				Implementierung		
Bez	Name	St	Format	St	Format	Anwendung / Bemerkung
6311	Measurement purpose code qualifier	M	an..3	M	an..3	**AAZ** Handling unit measurement
C502	Measurement details	C		R		
6313	Measured attribute code	C	an..3	R	an..3	**ABJ** Volume
6321	Measurement significance code	C	an..3	N		Nicht genutzt
6155	Non-discrete measurement name code	C	an..17	N		Nicht genutzt
6154	Non-discrete measurement name	C	an..70	N		Nicht genutzt
C174	Value/range	C		R		
6411	Measurement unit code	C	an..8	R	an..8	**DMQ** cubic decimetre **MTQ** cubic metre
6314	Measure	C	an..18	R	n..5	Volume measure
6162	Range minimum quantity	C	n..18	N		Nicht genutzt
6152	Range maximum quantity	C	n..18	N		Nicht genutzt
6432	Significant digits quantity	C	n..2	N		Nicht genutzt
7383	Surface or layer code	C	an..3	N		Nicht genutzt

Total cube of the package
Beispiel:

```
MEA+AAZ+ABJ+MTQ:9'
```

Bez =Bezeichner; Nr = Laufende Segmentnummer im Guide; MaxWdh = Maximale Wiederholung; St = Status (M=Muss/Mandatory, C=Conditional, R=Erforderlich/Required, O=Optional, D=Abhängig von/Dependent, A=Empfohlen/Advised)

COPYRIGHT VDA 2026

Segmente

Nr	Bez	St	MaxWdh	Name
	SG12	R	1	Handling unit group details
82	MEA	O	1	Maximum stacking weight

Standard				Implementierung		
Bez	Name	St	Format	St	Format	Anwendung / Bemerkung
6311	Measurement purpose code qualifier	M	an..3	M	an..3	**ABR** Certified weight
C502	Measurement details	C		R		
6313	Measured attribute code	C	an..3	R	an..3	**AFE** Maximum stacking weight
6321	Measurement significance code	C	an..3	N		Nicht genutzt
6155	Non-discrete measurement name code	C	an..17	N		Nicht genutzt
6154	Non-discrete measurement name	C	an..70	N		Nicht genutzt
C174	Value/range	C		R		
6411	Measurement unit code	C	an..8	R	an..8	**KGM** kilogram
6314	Measure	C	an..18	R	n..12	Load bearing capacity
6162	Range minimum quantity	C	n..18	N		Nicht genutzt
6152	Range maximum quantity	C	n..18	N		Nicht genutzt
6432	Significant digits quantity	C	n..2	N		Nicht genutzt
7383	Surface or layer code	C	an..3	N		Nicht genutzt

Maximum load to be filled in a package or loaded onto an equipment.
Beispiel:

MEA+ABR+AFE+KGM:9'

Bez =Bezeichner; Nr = Laufende Segmentnummer im Guide; MaxWdh = Maximale Wiederholung; St = Status (M=Muss/Mandatory, C=Conditional, R=Erforderlich/Required, O=Optional, D=Abhängig von/Dependent, A=Empfohlen/Advised)

COPYRIGHT VDA 2026

Segmente

Nr	Bez	St	MaxWdh	Name
	SG12	R	1	Handling unit group details
83	MEA	O	1	Maximum stackability for transport purposes

Standard				Implementierung		
Bez	Name	St	Format	St	Format	Anwendung / Bemerkung
6311	Measurement purpose code qualifier	M	an..3	M	an..3	**ABU** Quota
C502	Measurement details	C		N		Nicht genutzt
6313	Measured attribute code	C	an..3	N		Nicht genutzt
6321	Measurement significance code	C	an..3	N		Nicht genutzt
6155	Non-discrete measurement name code	C	an..17	N		Nicht genutzt
6154	Non-discrete measurement name	C	an..70	N		Nicht genutzt
C174	Value/range	C		R		
6411	Measurement unit code	C	an..8	R	an..8	**C62** one
6314	Measure	C	an..18	R	n..9	Maximum stackability for transport purposes Number of layers of packages in the transport. (1 = not stackable)
6162	Range minimum quantity	C	n..18	N		Nicht genutzt
6152	Range maximum quantity	C	n..18	N		Nicht genutzt
6432	Significant digits quantity	C	n..2	N		Nicht genutzt
7383	Surface or layer code	C	an..3	N		Nicht genutzt

Beispiel:

```
MEA+ABU++C62:9'
```

Bez =Bezeichner; Nr = Laufende Segmentnummer im Guide; MaxWdh = Maximale Wiederholung; St = Status (M=Muss/Mandatory, C=Conditional, R=Erforderlich/Required, O=Optional, D=Abhängig von/Dependent, A=Empfohlen/Advised)

COPYRIGHT VDA 2026

Segmente

Nr	Bez	St	MaxWdh	Name
	SG12	R	1	Handling unit group details
84	QTY	O	1	Maximum stackability

Standard				Implementierung		
Bez	Name	St	Format	St	Format	Anwendung / Bemerkung
C186	Quantity details	M		M		
6063	Quantity type code qualifier	M	an..3	M	an..3	**171** Maximum stackability
6060	Quantity	M	an..35	M	n..3	Maximum number of packages, which might be stacked on top of each other without causing damage.
6411	Measurement unit code	C	an..8	O	an..8	**C62** one **PCE** piece

Maximum number of packages, which might be stacked on top of each other without causing damage.
Beispiel:

```
QTY+171:9:C62'
```

Bez =Bezeichner; Nr = Laufende Segmentnummer im Guide; MaxWdh = Maximale Wiederholung; St = Status (M=Muss/Mandatory, C=Conditional, R=Erforderlich/Required, O=Optional, D=Abhängig von/Dependent, A=Empfohlen/Advised)

COPYRIGHT VDA 2026

Segmente

Nr	Bez	St	MaxWdh	Name
	SG14	O	1000	List of individual handling units
85	PCI	M	1	Handling unit label type

Standard				Implementierung		
Bez	Name	St	Format	St	Format	Anwendung / Bemerkung
4233	Marking instructions code	C	an..3	O	an..3	**16** Buyer's instructions **17** Seller's instructions
C210	Marks & labels	C		N		Nicht genutzt
7102	Shipping marks description	M	an..35	N		Nicht genutzt
7102	Shipping marks description	C	an..35	N		Nicht genutzt
7102	Shipping marks description	C	an..35	N		Nicht genutzt
7102	Shipping marks description	C	an..35	N		Nicht genutzt
7102	Shipping marks description	C	an..35	N		Nicht genutzt
7102	Shipping marks description	C	an..35	N		Nicht genutzt
7102	Shipping marks description	C	an..35	N		Nicht genutzt
7102	Shipping marks description	C	an..35	N		Nicht genutzt
7102	Shipping marks description	C	an..35	N		Nicht genutzt
7102	Shipping marks description	C	an..35	N		Nicht genutzt
7102	Shipping marks description	C	an..35	N		Nicht genutzt
8169	Full or empty indicator code	C	an..3	N		Nicht genutzt
C827	Type of marking	C		O		
7511	Marking type code	M	an..3	R	an..3	Label identifier coded Handling Unit Category First part of transport label. This identifier indicates whether the label is applied to the outer or the inner packaging. For outer packaging labels, a distinction is made between a master label and a mixed load label. 6J corresponds to former code "M" = master label 5J corresponds to former code "G" = master mixed load **5J** Unique license plate number assigned to a transport handling unit with inner handling units, packed with unlike items. JAI019 **6J** Unique license plate number assigned to a transport handling unit with inner handling units, all packed with like items. JAI019
1131	Code list identification code	C	an..17	N		Nicht genutzt
3055	Code list responsible agency code	C	an..3	O	an..3	**5** ISO (International Organization for Standardization)

Beispiel:

```
PCI+17+++5J::5'
```

Bez =Bezeichner; Nr = Laufende Segmentnummer im Guide; MaxWdh = Maximale Wiederholung; St = Status (M=Muss/Mandatory, C=Conditional, R=Erforderlich/Required, O=Optional, D=Abhängig von/Dependent, A=Empfohlen/Advised)

COPYRIGHT VDA 2026

Segmente

Nr	Bez	St	MaxWdh	Name
	SG16	D	1	Individual handling unit's transport label number
86	GIN	M	1	Individual handling unit's transport label number

Standard				Implementierung		
Bez	Name	St	Format	St	Format	Anwendung / Bemerkung
7405	Object identification code qualifier	M	an..3	M	an..3	**ML** Marking/label number
C208	Identity number range	M		M		
7402	Object identifier	M	an..35	M	an..17	Handling unit's transport label number
7402	Object identifier	C	an..35	D	an..35	Label ID of the handling unit (license plate), consisting of the issuing agency code (IAC) (e.g. UN for Dun & Breadstreet), the company code of the shipper (e.g. DUNS number) plus the unique ID of the shipping unit assigned by shipper, who was identified e.g. with the DUNS number (e.g. 000012345) => 5JUN1234567890000012345 If the content of the message is used to generate labels or shipping documents, then transmitting the complete ID is strongly recommended. Handling units and packages shall be identifyable by globally unique identifiers. This data element is amongs other purposes used by form generators to print these uniue identifiers.
C208	Identity number range	C		N		Nicht genutzt
7402	Object identifier	M	an..35	N		Nicht genutzt
7402	Object identifier	C	an..35	N		Nicht genutzt
C208	Identity number range	C		N		Nicht genutzt
7402	Object identifier	M	an..35	N		Nicht genutzt
7402	Object identifier	C	an..35	N		Nicht genutzt
C208	Identity number range	C		N		Nicht genutzt
7402	Object identifier	M	an..35	N		Nicht genutzt
7402	Object identifier	C	an..35	N		Nicht genutzt
C208	Identity number range	C		N		Nicht genutzt
7402	Object identifier	M	an..35	N		Nicht genutzt
7402	Object identifier	C	an..35	N		Nicht genutzt

The unique identifier of a loading unit usually consists of the Data Identifier (e.g. 5J), the Company Identification Number of the ship from (e.g. UN987654321 for the DUNS number) and the serial number of the shipping unit.
Beispiel:

GIN+ML+X:X'

Bez =Bezeichner; Nr = Laufende Segmentnummer im Guide; MaxWdh = Maximale Wiederholung; St = Status (M=Muss/Mandatory, C=Conditional, R=Erforderlich/Required, O=Optional, D=Abhängig von/Dependent, A=Empfohlen/Advised)

COPYRIGHT VDA 2026

Segmente

Nr	Bez	St	MaxWdh	Name
	SG16	O	97	Individual handling unit's label numbers
87	GIN	M	1	List of contained packaging items

Standard				Implementierung		
Bez	Name	St	Format	St	Format	Anwendung / Bemerkung
7405	Object identification code qualifier	M	an..3	M	an..3	Interpretation: package numbers of contained packages **AW** Serial shipping container code
C208	Identity number range	M		M		
7402	Object identifier	M	an..35	M	an..35	ID of package(s) contained in an outer or an intermediate packaging. Packages include also compartments in a JIS container or a virtual container (see process documentation and packaging examples).
7402	Object identifier	C	an..35	N		Nicht genutzt
C208	Identity number range	C		O		
7402	Object identifier	M	an..35	M	an..35	see DE 7402#1
7402	Object identifier	C	an..35	N		Nicht genutzt
C208	Identity number range	C		O		
7402	Object identifier	M	an..35	M	an..35	see DE 7402#1
7402	Object identifier	C	an..35	N		Nicht genutzt
C208	Identity number range	C		O		
7402	Object identifier	M	an..35	M	an..35	see DE 7402#1
7402	Object identifier	C	an..35	N		Nicht genutzt
C208	Identity number range	C		O		
7402	Object identifier	M	an..35	M	an..35	see DE 7402#1
7402	Object identifier	C	an..35	N		Nicht genutzt

List of or packages contained in the identified handling unit.
Beispiel:

GIN+AW+Packstück ID+Packstück ID+Packstück ID+Packstück ID+Packstück ID'

Bez =Bezeichner; Nr = Laufende Segmentnummer im Guide; MaxWdh = Maximale Wiederholung; St = Status (M=Muss/Mandatory, C=Conditional, R=Erforderlich/Required, O=Optional, D=Abhängig von/Dependent, A=Empfohlen/Advised)

COPYRIGHT VDA 2026

Segmente

Nr	Bez	St	MaxWdh	Name
	SG16	O	1	Package identification, assigned by the logistics service provider
88	GIN	M	1	Package identification, assigned by the logistics service provider

Standard				Implementierung		
Bez	Name	St	Format	St	Format	Anwendung / Bemerkung
7405	Object identification code qualifier	M	an..3	M	an..3	**X01** Package identification, assigned by the logistics service provider 7405
C208	Identity number range	M		M		
7402	Object identifier	M	an..35	M	an..35	Package identification, assigned by the logistics service provider
7402	Object identifier	C	an..35	N		Nicht genutzt
C208	Identity number range	C		N		Nicht genutzt
7402	Object identifier	M	an..35	N		Nicht genutzt
7402	Object identifier	C	an..35	N		Nicht genutzt
C208	Identity number range	C		N		Nicht genutzt
7402	Object identifier	M	an..35	N		Nicht genutzt
7402	Object identifier	C	an..35	N		Nicht genutzt
C208	Identity number range	C		N		Nicht genutzt
7402	Object identifier	M	an..35	N		Nicht genutzt
7402	Object identifier	C	an..35	N		Nicht genutzt
C208	Identity number range	C		N		Nicht genutzt
7402	Object identifier	M	an..35	N		Nicht genutzt
7402	Object identifier	C	an..35	N		Nicht genutzt

Beispiel:

```
GIN+X01+54321'
```

Bez =Bezeichner; Nr = Laufende Segmentnummer im Guide; MaxWdh = Maximale Wiederholung; St = Status (M=Muss/Mandatory, C=Conditional, R=Erforderlich/Required, O=Optional, D=Abhängig von/Dependent, A=Empfohlen/Advised)

COPYRIGHT VDA 2026

Segmente

Nr	Bez	St	MaxWdh	Name
	SG17	O	1	Individual handling unit's weights
				Since the gross and net weights may be different even for individual handling units belonging to the same handling unit group, they have to be stated individually rather than as a common property of the handling unit group.
89	COD	M	1	Trigger segment

Standard				Implementierung		
Bez	Name	St	Format	St	Format	Anwendung / Bemerkung
C823	Type of unit/component	C		R		
7505	Unit or component type description code	C	an..3	R	an..3	This segment is used as trigger only. Since UN/EDIFACT syntax rules require at least one data element in a segment, a dummy code has to be transmitted. **NO**
1131	Code list identification code	C	an..17	N		Nicht genutzt
3055	Code list responsible agency code	C	an..3	N		Nicht genutzt
7504	Unit or component type description	C	an..35	N		Nicht genutzt
C824	Component material	C		N		Nicht genutzt
7507	Component material description code	C	an..3	N		Nicht genutzt
1131	Code list identification code	C	an..17	N		Nicht genutzt
3055	Code list responsible agency code	C	an..3	N		Nicht genutzt
7506	Component material description	C	an..35	N		Nicht genutzt

Beispiel:

COD+NO'

Bez =Bezeichner; Nr = Laufende Segmentnummer im Guide; MaxWdh = Maximale Wiederholung; St = Status (M=Muss/Mandatory, C=Conditional, R=Erforderlich/Required, O=Optional, D=Abhängig von/Dependent, A=Empfohlen/Advised)

COPYRIGHT VDA 2026

Segmente

Nr	Bez	St	MaxWdh	Name
	SG17	O	1	Individual handling unit's weights

Since the gross and net weights may be different even for individual handling units belonging to the same handling unit group, they have to be stated individually rather than as a common property of the handling unit group.

Nr	Bez	St	MaxWdh	Name
90	MEA	O	1	Gross weight

Standard				Implementierung		
Bez	Name	St	Format	St	Format	Anwendung / Bemerkung
6311	Measurement purpose code qualifier	M	an..3	M	an..3	**AAZ** Handling unit measurement
C502	Measurement details	C		R		
6313	Measured attribute code	C	an..3	R	an..3	**AAB** Goods item gross weight
6321	Measurement significance code	C	an..3	N		Nicht genutzt
6155	Non-discrete measurement name code	C	an..17	N		Nicht genutzt
6154	Non-discrete measurement name	C	an..70	N		Nicht genutzt
C174	Value/range	C		R		
6411	Measurement unit code	C	an..8	R	an..8	**KGM** kilogram
6314	Measure	C	an..18	R	n..12	Handling unit's gross weight
6162	Range minimum quantity	C	n..18	N		Nicht genutzt
6152	Range maximum quantity	C	n..18	N		Nicht genutzt
6432	Significant digits quantity	C	n..2	N		Nicht genutzt
7383	Surface or layer code	C	an..3	N		Nicht genutzt

Beispiel:

MEA+AAZ+AAB+KGM:9'

Bez =Bezeichner; Nr = Laufende Segmentnummer im Guide; MaxWdh = Maximale Wiederholung; St = Status (M=Muss/Mandatory, C=Conditional, R=Erforderlich/Required, O=Optional, D=Abhängig von/Dependent, A=Empfohlen/Advised)

COPYRIGHT VDA 2026

Segmente

Nr	Bez	St	MaxWdh	Name
	SG17	O	1	Individual handling unit's weights
				Since the gross and net weights may be different even for individual handling units belonging to the same handling unit group, they have to be stated individually rather than as a common property of the handling unit group.
91	MEA	O	1	Net weight

Standard				Implementierung		
Bez	Name	St	Format	St	Format	Anwendung / Bemerkung
6311	Measurement purpose code qualifier	M	an..3	M	an..3	**AAZ** Handling unit measurement
C502	Measurement details	C		R		
6313	Measured attribute code	C	an..3	R	an..3	**AAA** Net weight
6321	Measurement significance code	C	an..3	N		Nicht genutzt
6155	Non-discrete measurement name code	C	an..17	N		Nicht genutzt
6154	Non-discrete measurement name	C	an..70	N		Nicht genutzt
C174	Value/range	C		R		
6411	Measurement unit code	C	an..8	R	an..8	**KGM** kilogram
6314	Measure	C	an..18	R	an..18	Net weight
6162	Range minimum quantity	C	n..18	N		Nicht genutzt
6152	Range maximum quantity	C	n..18	N		Nicht genutzt
6432	Significant digits quantity	C	n..2	N		Nicht genutzt
7383	Surface or layer code	C	an..3	N		Nicht genutzt

Weights are transmitted per individual loading unit since even though they are identically (same type and number of contained packaging items) due to different quantities per inner package the gross and net weigt of the loading units can differ.
Beispiel:

MEA+AAZ+AAA+KGM:9'

Bez =Bezeichner; Nr = Laufende Segmentnummer im Guide; MaxWdh = Maximale Wiederholung; St = Status (M=Muss/Mandatory, C=Conditional, R=Erforderlich/Required, O=Optional, D=Abhängig von/Dependent, A=Empfohlen/Advised)

COPYRIGHT VDA 2026

Segmente

Nr	Bez	St	MaxWdh	Name
	SG17	O	1	Individual handling unit's weights

Since the gross and net weights may be different even for individual handling units belonging to the same handling unit group, they have to be stated individually rather than as a common property of the handling unit group.

Nr	Bez	St	MaxWdh	Name
92	MEA	O	1	Tare weight

Standard				Implementierung		
Bez	Name	St	Format	St	Format	Anwendung / Bemerkung
6311	Measurement purpose code qualifier	M	an..3	M	an..3	**AAZ** Handling unit measurement
C502	Measurement details	C		R		
6313	Measured attribute code	C	an..3	R	an..3	**T** Tare weight
6321	Measurement significance code	C	an..3	N		Nicht genutzt
6155	Non-discrete measurement name code	C	an..17	N		Nicht genutzt
6154	Non-discrete measurement name	C	an..70	N		Nicht genutzt
C174	Value/range	C		R		
6411	Measurement unit code	C	an..8	R	an..8	**KGM** kilogram
6314	Measure	C	an..18	R	an..18	Weight of the single package (without content)
6162	Range minimum quantity	C	n..18	N		Nicht genutzt
6152	Range maximum quantity	C	n..18	N		Nicht genutzt
6432	Significant digits quantity	C	n..2	N		Nicht genutzt
7383	Surface or layer code	C	an..3	N		Nicht genutzt

Beispiel:

```
MEA+AAZ+T+KGM:100'
```

Bez =Bezeichner; Nr = Laufende Segmentnummer im Guide; MaxWdh = Maximale Wiederholung; St = Status (M=Muss/Mandatory, C=Conditional, R=Erforderlich/Required, O=Optional, D=Abhängig von/Dependent, A=Empfohlen/Advised)

COPYRIGHT VDA 2026

Segmente

Nr	Bez	St	MaxWdh	Name
	SG12	O	9999	Packaging aid
93	PAC	M	1	Package

Standard				Implementierung		
Bez	Name	St	Format	St	Format	Anwendung / Bemerkung
7224	Package quantity	C	n..8	O	n..8	Actual number of packages , e.g. belonging to a group of packages. Considered to be a number of identical packages.
C531	Packaging details	C		R		
7075	Packaging level code	C	an..3	N		Nicht genutzt
7233	Packaging related description code	C	an..3	R	an..3	**37** Package protection
7073	Packaging terms and conditions code	C	an..3	N		Nicht genutzt
C202	Package type	C		O		
7065	Package type description code	C	an..17	R	an..17	Code identifying the type of a packaging aid. Note: applicable codes have to be defined mutually.
1131	Code list identification code	C	an..17	N		Nicht genutzt
3055	Code list responsible agency code	C	an..3	O	an..3	**92** Assigned by buyer or buyer's agent
7064	Type of packages	C	an..35	N		Nicht genutzt
C402	Package type identification	C		O		
7077	Description format code	M	an..3	M	an..3	**X** Semi-structured (code + text)
7064	Type of packages	M	an..35	M	an..35	Designation of packaging (packaging code of supplier). According to EDIFACT, this element is mandatory. If this DE group is to be used and the supplier has not defined internal packaging codes, enter the same value as in DE 7064 for VDA code.
7143	Item type identification code	C	an..3	O	an..3	**SA** Supplier's article number
7064	Type of packages	C	an..35	O	an..35	Designation of packaging, VDA code list (see separate documentation)
7143	Item type identification code	C	an..3	N		Nicht genutzt
C532	Returnable package details	C		N		Nicht genutzt
8395	Returnable package freight payment responsibility code	C	an..3	N		Nicht genutzt
8393	Returnable package load contents code	C	an..3	N		Nicht genutzt

Beispiel:

```
PAC+1+:37+4A::92+X:4A:SA:080607'
```

Bez =Bezeichner; Nr = Laufende Segmentnummer im Guide; MaxWdh = Maximale Wiederholung; St = Status (M=Muss/Mandatory, C=Conditional, R=Erforderlich/Required, O=Optional, D=Abhängig von/Dependent, A=Empfohlen/Advised)

COPYRIGHT VDA 2026

Segmente

Nr	Bez	St	MaxWdh	Name
	SG11	O	9999	Despatch control line / group of inner packaging items and article line
				The maximum number of SG-CPS in a message shall not exceed 9999.
94	CPS	M	1	Consignment packing sequence

Standard				Implementierung		
Bez	Name	St	Format	St	Format	Anwendung / Bemerkung
7164	Hierarchical structure level identifier	M	an..35	R	n..6	Line Number Sequential number generated by the sender to identify a line item within a message.
7166	Hierarchical structure parent identifier	C	an..35	N		Nicht genutzt
7075	Packaging level code	C	an..3	R	an..3	If Code 4 is used, no parent relationship exists (simplified handling unit concept). Code specifying a level of packaging. **1** Inner **4** No packaging hierarchy

The specific representation of packaging hierarchies is described in detail in VDA 4987 Parts 1 to 4 and is also applicable here.
The message is structured from the outside inwards. First enter the handling units, then packaging items contained in the handling units.
As the message does not necessarily contain one-to-one relationships between batch, best before date and delivery note item, generate a separate SG with trigger CPS for each batch, best before date, etc.
Beispiel:

```
CPS+9++1'
```

Bez =Bezeichner; Nr = Laufende Segmentnummer im Guide; MaxWdh = Maximale Wiederholung; St = Status (M=Muss/Mandatory, C=Conditional, R=Erforderlich/Required, O=Optional, D=Abhängig von/Dependent, A=Empfohlen/Advised)

COPYRIGHT VDA 2026

Segmente

Nr	Bez	St	MaxWdh	Name
	SG12	O	1	Group of inner packaging items
95	PAC	M	1	Package

Standard				Implementierung		
Bez	Name	St	Format	St	Format	Anwendung / Bemerkung
7224	Package quantity	C	n..8	R	n..6	Actual number of packages or handling units, e.g. belonging to a group of packages. Considered to be a number of identical packages.
C531	Packaging details	C		R		
7075	Packaging level code	C	an..3	N		Nicht genutzt
7233	Packaging related description code	C	an..3	R	an..3	**35** Type of package
7073	Packaging terms and conditions code	C	an..3	N		Nicht genutzt
C202	Package type	C		R		
7065	Package type description code	C	an..17	R	an..17	Designation of packaging (packaging code of customer)
1131	Code list identification code	C	an..17	N		Nicht genutzt
3055	Code list responsible agency code	C	an..3	O	an..3	**92** Assigned by buyer or buyer's agent
7064	Type of packages	C	an..35	N		Nicht genutzt
C402	Package type identification	C		O		
7077	Description format code	M	an..3	M	an..3	**X** Semi-structured (code + text)
7064	Type of packages	M	an..35	M	an..35	Designation of packaging (packaging code of supplier). According to EDIFACT, this element is mandatory. If this DE group is to be used and the supplier has not defined internal packaging codes, enter the same value as in DE 7064 for VDA code.
7143	Item type identification code	C	an..3	O	an..3	**SA** Supplier's article number
7064	Type of packages	C	an..35	O	an..35	Designation of packaging, VDA code list (see separate documentation)
7143	Item type identification code	C	an..3	N		Nicht genutzt
C532	Returnable package details	C		N		Nicht genutzt
8395	Returnable package freight payment responsibility code	C	an..3	N		Nicht genutzt
8393	Returnable package load contents code	C	an..3	N		Nicht genutzt

The number of packages corresponds to the total number of packages of the same type (given in data element 7065). They may be in one or more handling units.
Beispiel:

```
PAC+9+:35+4A::92+X:4A:SA:080607'
```

Bez =Bezeichner; Nr = Laufende Segmentnummer im Guide; MaxWdh = Maximale Wiederholung; St = Status (M=Muss/Mandatory, C=Conditional, R=Erforderlich/Required, O=Optional, D=Abhängig von/Dependent, A=Empfohlen/Advised)

COPYRIGHT VDA 2026

Segmente

Nr	Bez	St	MaxWdh	Name
	SG12	O	1	Group of inner packaging items
96	MEA	O	1	Gross weight of the inner packaging item

Standard				Implementierung		
Bez	Name	St	Format	St	Format	Anwendung / Bemerkung
6311	Measurement purpose code qualifier	M	an..3	M	an..3	**AAY** Package measurement
C502	Measurement details	C		R		
6313	Measured attribute code	C	an..3	R	an..3	**G** Gross weight
6321	Measurement significance code	C	an..3	N		Nicht genutzt
6155	Non-discrete measurement name code	C	an..17	N		Nicht genutzt
6154	Non-discrete measurement name	C	an..70	N		Nicht genutzt
C174	Value/range	C		R		
6411	Measurement unit code	C	an..8	R	an..8	**KGM** kilogram
6314	Measure	C	an..18	R	n..12	Gross weight - weight (mass) without carrier's equipment
6162	Range minimum quantity	C	n..18	N		Nicht genutzt
6152	Range maximum quantity	C	n..18	N		Nicht genutzt
6432	Significant digits quantity	C	n..2	N		Nicht genutzt
7383	Surface or layer code	C	an..3	N		Nicht genutzt

Beispiel:

```
MEA+AAY+G+KGM:9'
```

Bez =Bezeichner; Nr = Laufende Segmentnummer im Guide; MaxWdh = Maximale Wiederholung; St = Status (M=Muss/Mandatory, C=Conditional, R=Erforderlich/Required, O=Optional, D=Abhängig von/Dependent, A=Empfohlen/Advised)

COPYRIGHT VDA 2026

Segmente

Nr	Bez	St	MaxWdh	Name
	SG12	O	1	Group of inner packaging items
97	MEA	O	1	Net weight of the (individual) packaging item

Standard				Implementierung		
Bez	Name	St	Format	St	Format	Anwendung / Bemerkung
6311	Measurement purpose code qualifier	M	an..3	M	an..3	**AAY** Package measurement
C502	Measurement details	C		R		
6313	Measured attribute code	C	an..3	O	an..3	**AAL** Net weight
6321	Measurement significance code	C	an..3	N		Nicht genutzt
6155	Non-discrete measurement name code	C	an..17	N		Nicht genutzt
6154	Non-discrete measurement name	C	an..70	N		Nicht genutzt
C174	Value/range	C		R		
6411	Measurement unit code	C	an..8	R	an..8	**KGM** kilogram
6314	Measure	C	an..18	R	n..12	Mass of the items contained in the inner packaging including optional sales package.
6162	Range minimum quantity	C	n..18	N		Nicht genutzt
6152	Range maximum quantity	C	n..18	N		Nicht genutzt
6432	Significant digits quantity	C	n..2	N		Nicht genutzt
7383	Surface or layer code	C	an..3	N		Nicht genutzt

Beispiel:

```
MEA+AAY+AAL+KGM:9'
```

Bez =Bezeichner; Nr = Laufende Segmentnummer im Guide; MaxWdh = Maximale Wiederholung; St = Status (M=Muss/Mandatory, C=Conditional, R=Erforderlich/Required, O=Optional, D=Abhängig von/Dependent, A=Empfohlen/Advised)

COPYRIGHT VDA 2026

Segmente

Nr	Bez	St	MaxWdh	Name
	SG12	O	1	Group of inner packaging items
98	MEA	O	1	Tare weight

Standard				Implementierung		
Bez	Name	St	Format	St	Format	Anwendung / Bemerkung
6311	Measurement purpose code qualifier	M	an..3	M	an..3	**AAY** Package measurement
C502	Measurement details	C		R		
6313	Measured attribute code	C	an..3	R	an..3	**T** Tare weight
6321	Measurement significance code	C	an..3	N		Nicht genutzt
6155	Non-discrete measurement name code	C	an..17	N		Nicht genutzt
6154	Non-discrete measurement name	C	an..70	N		Nicht genutzt
C174	Value/range	C		R		
6411	Measurement unit code	C	an..8	R	an..8	**KGM** kilogram
6314	Measure	C	an..18	R	an..18	Weight of the package (without content)
6162	Range minimum quantity	C	n..18	N		Nicht genutzt
6152	Range maximum quantity	C	n..18	N		Nicht genutzt
6432	Significant digits quantity	C	n..2	N		Nicht genutzt
7383	Surface or layer code	C	an..3	N		Nicht genutzt

Beispiel:

```
MEA+AAY+T+KGM:100'
```

Bez =Bezeichner; Nr = Laufende Segmentnummer im Guide; MaxWdh = Maximale Wiederholung; St = Status (M=Muss/Mandatory, C=Conditional, R=Erforderlich/Required, O=Optional, D=Abhängig von/Dependent, A=Empfohlen/Advised)

COPYRIGHT VDA 2026

Segmente

Nr	Bez	St	MaxWdh	Name
	SG12	O	1	Group of inner packaging items
99	MEA	O	1	Length

Standard				Implementierung		
Bez	Name	St	Format	St	Format	Anwendung / Bemerkung
6311	Measurement purpose code qualifier	M	an..3	M	an..3	**AAY** Package measurement
C502	Measurement details	C		R		
6313	Measured attribute code	C	an..3	O	an..3	**LN** Length
6321	Measurement significance code	C	an..3	N		Nicht genutzt
6155	Non-discrete measurement name code	C	an..17	N		Nicht genutzt
6154	Non-discrete measurement name	C	an..70	N		Nicht genutzt
C174	Value/range	C		R		
6411	Measurement unit code	C	an..8	R	an..8	**MMT** millimetre
6314	Measure	C	an..18	R	n..5	
6162	Range minimum quantity	C	n..18	N		Nicht genutzt
6152	Range maximum quantity	C	n..18	N		Nicht genutzt
6432	Significant digits quantity	C	n..2	N		Nicht genutzt
7383	Surface or layer code	C	an..3	N		Nicht genutzt

Beispiel:

```
MEA+AAY+LN+MMT:9'
```

Bez =Bezeichner; Nr = Laufende Segmentnummer im Guide; MaxWdh = Maximale Wiederholung; St = Status (M=Muss/Mandatory, C=Conditional, R=Erforderlich/Required, O=Optional, D=Abhängig von/Dependent, A=Empfohlen/Advised)

COPYRIGHT VDA 2026

Segmente

Nr	Bez	St	MaxWdh	Name
	SG12	O	1	Group of inner packaging items
100	MEA	O	1	Width

Standard				Implementierung		
Bez	Name	St	Format	St	Format	Anwendung / Bemerkung
6311	Measurement purpose code qualifier	M	an..3	M	an..3	**AAY** Package measurement
C502	Measurement details	C		R		
6313	Measured attribute code	C	an..3	R	an..3	**WD** Width dimension
6321	Measurement significance code	C	an..3	N		Nicht genutzt
6155	Non-discrete measurement name code	C	an..17	N		Nicht genutzt
6154	Non-discrete measurement name	C	an..70	N		Nicht genutzt
C174	Value/range	C		R		
6411	Measurement unit code	C	an..8	R	an..8	**MMT** millimetre
6314	Measure	C	an..18	R	n..5	
6162	Range minimum quantity	C	n..18	N		Nicht genutzt
6152	Range maximum quantity	C	n..18	N		Nicht genutzt
6432	Significant digits quantity	C	n..2	N		Nicht genutzt
7383	Surface or layer code	C	an..3	N		Nicht genutzt

Beispiel:

```
MEA+AAY+WD+MMT:9'
```

Bez =Bezeichner; Nr = Laufende Segmentnummer im Guide; MaxWdh = Maximale Wiederholung; St = Status (M=Muss/Mandatory, C=Conditional, R=Erforderlich/Required, O=Optional, D=Abhängig von/Dependent, A=Empfohlen/Advised)

COPYRIGHT VDA 2026

Segmente

Nr	Bez	St	MaxWdh	Name
	SG12	O	1	Group of inner packaging items
101	MEA	O	1	Height

Standard				Implementierung		
Bez	Name	St	Format	St	Format	Anwendung / Bemerkung
6311	Measurement purpose code qualifier	M	an..3	M	an..3	**AAY** Package measurement
C502	Measurement details	C		R		
6313	Measured attribute code	C	an..3	R	an..3	**HT** Height dimension
6321	Measurement significance code	C	an..3	N		Nicht genutzt
6155	Non-discrete measurement name code	C	an..17	N		Nicht genutzt
6154	Non-discrete measurement name	C	an..70	N		Nicht genutzt
C174	Value/range	C		R		
6411	Measurement unit code	C	an..8	R	an..8	**MMT** millimetre
6314	Measure	C	an..18	R	n..9	
6162	Range minimum quantity	C	n..18	N		Nicht genutzt
6152	Range maximum quantity	C	n..18	N		Nicht genutzt
6432	Significant digits quantity	C	n..2	N		Nicht genutzt
7383	Surface or layer code	C	an..3	N		Nicht genutzt

Beispiel:

```
MEA+AAY+HT+MMT:9'
```

Bez =Bezeichner; Nr = Laufende Segmentnummer im Guide; MaxWdh = Maximale Wiederholung; St = Status (M=Muss/Mandatory, C=Conditional, R=Erforderlich/Required, O=Optional, D=Abhängig von/Dependent, A=Empfohlen/Advised)

COPYRIGHT VDA 2026

Segmente

Nr	Bez	St	MaxWdh	Name
	SG12	O	1	Group of inner packaging items
102	MEA	O	1	Package volume

Standard				Implementierung		
Bez	Name	St	Format	St	Format	Anwendung / Bemerkung
6311	Measurement purpose code qualifier	M	an..3	M	an..3	**AAY** Package measurement
C502	Measurement details	C		R		
6313	Measured attribute code	C	an..3	R	an..3	**ABJ** Volume
6321	Measurement significance code	C	an..3	N		Nicht genutzt
6155	Non-discrete measurement name code	C	an..17	N		Nicht genutzt
6154	Non-discrete measurement name	C	an..70	N		Nicht genutzt
C174	Value/range	C		R		
6411	Measurement unit code	C	an..8	R	an..8	**LTR** litre **DMQ** cubic decimetre **MTQ** cubic metre
6314	Measure	C	an..18	R	an..18	Volume
6162	Range minimum quantity	C	n..18	N		Nicht genutzt
6152	Range maximum quantity	C	n..18	N		Nicht genutzt
6432	Significant digits quantity	C	n..2	N		Nicht genutzt
7383	Surface or layer code	C	an..3	N		Nicht genutzt

Beispiel:

```
MEA+AAY+ABJ+LTR:9'
```

Bez =Bezeichner; Nr = Laufende Segmentnummer im Guide; MaxWdh = Maximale Wiederholung; St = Status (M=Muss/Mandatory, C=Conditional, R=Erforderlich/Required, O=Optional, D=Abhängig von/Dependent, A=Empfohlen/Advised)

COPYRIGHT VDA 2026

Segmente

Nr	Bez	St	MaxWdh	Name
	SG12	O	1	Group of inner packaging items
103	MEA	O	1	Maximum stackability for transport purposes

Standard				Implementierung		
Bez	Name	St	Format	St	Format	Anwendung / Bemerkung
6311	Measurement purpose code qualifier	M	an..3	M	an..3	**ABU** Quota
C502	Measurement details	C		N		Nicht genutzt
6313	Measured attribute code	C	an..3	N		Nicht genutzt
6321	Measurement significance code	C	an..3	N		Nicht genutzt
6155	Non-discrete measurement name code	C	an..17	N		Nicht genutzt
6154	Non-discrete measurement name	C	an..70	N		Nicht genutzt
C174	Value/range	C		R		
6411	Measurement unit code	C	an..8	R	an..8	**C62** one
6314	Measure	C	an..18	R	n..9	Maximum stackability for transport purposes Number of layers of packages in the transport.
6162	Range minimum quantity	C	n..18	N		Nicht genutzt
6152	Range maximum quantity	C	n..18	N		Nicht genutzt
6432	Significant digits quantity	C	n..2	N		Nicht genutzt
7383	Surface or layer code	C	an..3	N		Nicht genutzt

Beispiel:

```
MEA+ABU++C62:9'
```

Bez =Bezeichner; Nr = Laufende Segmentnummer im Guide; MaxWdh = Maximale Wiederholung; St = Status (M=Muss/Mandatory, C=Conditional, R=Erforderlich/Required, O=Optional, D=Abhängig von/Dependent, A=Empfohlen/Advised)

COPYRIGHT VDA 2026

Segmente

Nr	Bez	St	MaxWdh	Name
	SG12	O	1	Group of inner packaging items
104	MEA	O	1	Maximum stacking weight

Standard				Implementierung		
Bez	Name	St	Format	St	Format	Anwendung / Bemerkung
6311	Measurement purpose code qualifier	M	an..3	M	an..3	**ABR** Certified weight
C502	Measurement details	C		R		
6313	Measured attribute code	C	an..3	R	an..3	**AFE** Maximum stacking weight
6321	Measurement significance code	C	an..3	N		Nicht genutzt
6155	Non-discrete measurement name code	C	an..17	N		Nicht genutzt
6154	Non-discrete measurement name	C	an..70	N		Nicht genutzt
C174	Value/range	C		R		
6411	Measurement unit code	C	an..8	R	an..8	**KGM** kilogram
6314	Measure	C	an..18	R	n..12	Max. load bearing capacity
6162	Range minimum quantity	C	n..18	N		Nicht genutzt
6152	Range maximum quantity	C	n..18	N		Nicht genutzt
6432	Significant digits quantity	C	n..2	N		Nicht genutzt
7383	Surface or layer code	C	an..3	N		Nicht genutzt

Maximum weight to which a packaging may be filled or maximum weight that may be placed on a piece of equipment.
Beispiel:

MEA+ABR+AFE+KGM:9'

Bez =Bezeichner; Nr = Laufende Segmentnummer im Guide; MaxWdh = Maximale Wiederholung; St = Status (M=Muss/Mandatory, C=Conditional, R=Erforderlich/Required, O=Optional, D=Abhängig von/Dependent, A=Empfohlen/Advised)

COPYRIGHT VDA 2026

Segmente

Nr	Bez	St	MaxWdh	Name
	SG12	O	1	Group of inner packaging items
105	QTY	O	1	Actual quantity per package

Standard				Implementierung		
Bez	Name	St	Format	St	Format	Anwendung / Bemerkung
C186	Quantity details	M		M		
6063	Quantity type code qualifier	M	an..3	M	an..3	**52** Quantity per pack
6060	Quantity	M	an..35	M	n..6	Quantity (actual) per package
6411	Measurement unit code	C	an..8	R	an..8	PCE and C62 are synonyms for "piece" **C62** one **PCE** piece **DR** drum **SET** set **MTR** metre **CMT** centimetre **MMT** millimetre **MLT** millilitre **MTK** square metre **LEF** leaf **MTQ** cubic metre **LTR** litre **PR** pair **RO** roll **TNE** tonne (metric ton) **KGM** kilogram **GRM** gram **KMT** kilometre

Beispiel:

```
QTY+52:9:C62'
```

Bez =Bezeichner; Nr = Laufende Segmentnummer im Guide; MaxWdh = Maximale Wiederholung; St = Status (M=Muss/Mandatory, C=Conditional, R=Erforderlich/Required, O=Optional, D=Abhängig von/Dependent, A=Empfohlen/Advised)

COPYRIGHT VDA 2026

Segmente

Nr	Bez	St	MaxWdh	Name
	SG12	O	1	Group of inner packaging items
106	QTY	O	1	Maximum stackability

Standard				Implementierung		
Bez	Name	St	Format	St	Format	Anwendung / Bemerkung
C186	Quantity details	M		M		
6063	Quantity type code qualifier	M	an..3	M	an..3	**171** Maximum stackability
6060	Quantity	M	an..35	M	n..2	Maximum number of packages, which might be stacked on top of each other without causing damage.
6411	Measurement unit code	C	an..8	O	an..8	**C62** one **PCE** piece

Beispiel:

```
QTY+171:9:C62'
```

Bez =Bezeichner; Nr = Laufende Segmentnummer im Guide; MaxWdh = Maximale Wiederholung; St = Status (M=Muss/Mandatory, C=Conditional, R=Erforderlich/Required, O=Optional, D=Abhängig von/Dependent, A=Empfohlen/Advised)

COPYRIGHT VDA 2026

Segmente

Nr	Bez	St	MaxWdh	Name
	SG14	O	1000	Individual packaging item
107	PCI	M	1	Package identification

Standard				Implementierung		
Bez	Name	St	Format	St	Format	Anwendung / Bemerkung
4233	Marking instructions code	C	an..3	O	an..3	**17** Seller's instructions
C210	Marks & labels	C		N		Nicht genutzt
7102	Shipping marks description	M	an..35	N		Nicht genutzt
7102	Shipping marks description	C	an..35	N		Nicht genutzt
7102	Shipping marks description	C	an..35	N		Nicht genutzt
7102	Shipping marks description	C	an..35	N		Nicht genutzt
7102	Shipping marks description	C	an..35	N		Nicht genutzt
7102	Shipping marks description	C	an..35	N		Nicht genutzt
7102	Shipping marks description	C	an..35	N		Nicht genutzt
7102	Shipping marks description	C	an..35	N		Nicht genutzt
7102	Shipping marks description	C	an..35	N		Nicht genutzt
7102	Shipping marks description	C	an..35	N		Nicht genutzt
7102	Shipping marks description	C	an..35	N		Nicht genutzt
8169	Full or empty indicator code	C	an..3	N		Nicht genutzt
C827	Type of marking	C		O		
7511	Marking type code	M	an..3	M	an..3	Label identifier coded Handling Unit Category The Label identifier is the first part of a transport label. It identifies the label as outer or inner package label. For outer package, a distinction between Master label and Mixed label is possible. (Called data identifier in the global label documentation). In North America the code S is used as Supplier's Serial Number. **1J** Unique license plate number of a handling unit (THU or HU), which is lowest package level, packed with like items JAI019
1131	Code list identification code	C	an..17	N		Nicht genutzt
3055	Code list responsible agency code	C	an..3	O	an..3	Code specifying the agency responsible for a code list. **5** ISO (International Organization for Standardization)

The data element 4233 should contain the constant value "17" (=Seller's instruction) to avoid the transmission of an empty segment when the Label identifier is not transmitted.
Beispiel:

```
PCI+17+++1J::5'
```

Bez =Bezeichner; Nr = Laufende Segmentnummer im Guide; MaxWdh = Maximale Wiederholung; St = Status (M=Muss/Mandatory, C=Conditional, R=Erforderlich/Required, O=Optional, D=Abhängig von/Dependent, A=Empfohlen/Advised)

COPYRIGHT VDA 2026

Segmente

Nr	Bez	St	MaxWdh	Name
	SG16	O	99	Label number(s)
108	GIN	M	1	Label IDs

Standard				Implementierung		
Bez	Name	St	Format	St	Format	Anwendung / Bemerkung
7405	Object identification code qualifier	M	an..3	M	an..3	ML = package number specified by supplier **ML** Marking/label number
C208	Identity number range	M		M		
7402	Object identifier	M	an..35	R	an..35	ID of package
7402	Object identifier	C	an..35	D	an..35	Globally unique package ID of the innermost logistics package unit (license plate), consisting of the data identifier (DI) of the handling unit (e.g. 1J), the issuing agency code (IAC) (e.g. UN for Dun & Breadstreet), the company code of the shipper (e.g. DUNS number) plus the unique ID of the shipping unit assigned by shipper, who was identified e.g. with the DUNS number (e.g. 000012345) => 1JUN123456789000012345 It is recommeded to use globally unique package IDs. If the message is used to generate shipment documents or labels, this data element is the source for the package ID.
C208	Identity number range	C		O		
7402	Object identifier	M	an..35	R	an..35	see 7402 #1
7402	Object identifier	C	an..35	D	an..35	see 7402 #2
C208	Identity number range	C		O		
7402	Object identifier	M	an..35	R	an..35	see 7402 #1
7402	Object identifier	C	an..35	D	an..35	see 7402 #2
C208	Identity number range	C		O		
7402	Object identifier	M	an..35	R	an..35	see 7402 #1
7402	Object identifier	C	an..35	D	an..35	see 7402 #2
C208	Identity number range	C		O		
7402	Object identifier	M	an..35	R	an..35	see 7402 #1
7402	Object identifier	C	an..35	D	an..35	see 7402 #2

If correct assignment of the various package IDs is required, generate a separate SG-PCI for each package.
If this is not the case, the list can be transmitted with the respective IDs in the relevant GIN segment. The total number of SG-GIN must not exceed 99
Beispiel:

GIN+ML+000012345:1JUN123456789000012345+124:X+125:X+126:X+127:X'

Bez =Bezeichner; Nr = Laufende Segmentnummer im Guide; MaxWdh = Maximale Wiederholung; St = Status (M=Muss/Mandatory, C=Conditional, R=Erforderlich/Required, O=Optional, D=Abhängig von/Dependent, A=Empfohlen/Advised)

COPYRIGHT VDA 2026

Segmente

Nr	Bez	St	MaxWdh	Name
	SG16	O	1	Kanban card number
109	GIN	M	1	Kanban card number

Standard				Implementierung		
Bez	Name	St	Format	St	Format	Anwendung / Bemerkung
7405	Object identification code qualifier	M	an..3	M	an..3	**AL** Kanban card identifier
C208	Identity number range	M		M		
7402	Object identifier	M	an..35	M	an..35	Unique ID of a kanban card.
7402	Object identifier	C	an..35	N		Nicht genutzt
C208	Identity number range	C		O		
7402	Object identifier	M	an..35	M	an..35	Unique ID of a kanban card.
7402	Object identifier	C	an..35	N		Nicht genutzt
C208	Identity number range	C		O		
7402	Object identifier	M	an..35	M	an..35	Unique ID of a kanban card.
7402	Object identifier	C	an..35	N		Nicht genutzt
C208	Identity number range	C		O		
7402	Object identifier	M	an..35	M	an..35	Unique ID of a kanban card.
7402	Object identifier	C	an..35	N		Nicht genutzt
C208	Identity number range	C		O		
7402	Object identifier	M	an..35	M	an..35	Unique ID of a kanban card.
7402	Object identifier	C	an..35	N		Nicht genutzt

Beispiel:

```
GIN+AL+X+X+X+X+X'
```

Bez =Bezeichner; Nr = Laufende Segmentnummer im Guide; MaxWdh = Maximale Wiederholung; St = Status (M=Muss/Mandatory, C=Conditional, R=Erforderlich/Required, O=Optional, D=Abhängig von/Dependent, A=Empfohlen/Advised)

COPYRIGHT VDA 2026

Segmente

Nr	Bez	St	MaxWdh	Name
	SG16	O	99	Buyer's package ID
110	GIN	M	1	Customer assigned package ID

Standard				Implementierung		
Bez	Name	St	Format	St	Format	Anwendung / Bemerkung
7405	Object identification code qualifier	M	an..3	M	an..3	**BU** Package buyer assigned identifier
C208	Identity number range	M		M		
7402	Object identifier	M	an..35	M	an..35	
7402	Object identifier	C	an..35	N		Nicht genutzt
C208	Identity number range	C		C		
7402	Object identifier	M	an..35	M	an..35	
7402	Object identifier	C	an..35	N		Nicht genutzt
C208	Identity number range	C		C		
7402	Object identifier	M	an..35	M	an..35	
7402	Object identifier	C	an..35	N		Nicht genutzt
C208	Identity number range	C		C		
7402	Object identifier	M	an..35	M	an..35	
7402	Object identifier	C	an..35	N		Nicht genutzt
C208	Identity number range	C		C		
7402	Object identifier	M	an..35	M	an..35	
7402	Object identifier	C	an..35	N		Nicht genutzt

This segment is used to transmit the LHM number and the XOR manifest number (VW NLK).
If correct assignment of the various package IDs is required, generate a separate SG-PCI for each package.
If this is not the case, the list can be transmitted with the respective IDs in the relevant GIN segment. The total number of SG-GIN must not exceed 99.
Beispiel:

GIN+BU+X++++X'

Bez =Bezeichner; Nr = Laufende Segmentnummer im Guide; MaxWdh = Maximale Wiederholung; St = Status (M=Muss/Mandatory, C=Conditional, R=Erforderlich/Required, O=Optional, D=Abhängig von/Dependent, A=Empfohlen/Advised)

COPYRIGHT VDA 2026

Segmente

Nr	Bez	St	MaxWdh	Name
	SG16	O	1	Package identification, assigned by the logistics service provider
111	GIN	M	1	Package identification, assigned by the logistics service provider

Standard				Implementierung		
Bez	Name	St	Format	St	Format	Anwendung / Bemerkung
7405	Object identification code qualifier	M	an..3	M	an..3	**X01** Package identification, assigned by the logistics service provider 7405
C208	Identity number range	M		M		
7402	Object identifier	M	an..35	M	an..35	Package identification, assigned by the logistics service provider
7402	Object identifier	C	an..35	N		Nicht genutzt
C208	Identity number range	C		O		
7402	Object identifier	M	an..35	R	an..35	see 7402 #1
7402	Object identifier	C	an..35	N		Nicht genutzt
C208	Identity number range	C		O		
7402	Object identifier	M	an..35	R	an..35	see 7402 #1
7402	Object identifier	C	an..35	N		Nicht genutzt
C208	Identity number range	C		O		
7402	Object identifier	M	an..35	R	an..35	see 7402 #1
7402	Object identifier	C	an..35	N		Nicht genutzt
C208	Identity number range	C		O		
7402	Object identifier	M	an..35	R	an..35	see 7402 #1
7402	Object identifier	C	an..35	N		Nicht genutzt

Beispiel:

```
GIN+X01+54321+54323+54322+54330+54342'
```

Bez =Bezeichner; Nr = Laufende Segmentnummer im Guide; MaxWdh = Maximale Wiederholung; St = Status (M=Muss/Mandatory, C=Conditional, R=Erforderlich/Required, O=Optional, D=Abhängig von/Dependent, A=Empfohlen/Advised)

COPYRIGHT VDA 2026

Segmente

Nr	Bez	St	MaxWdh	Name
	SG12	O	9999	Packaging aid
112	PAC	M	1	Package

Standard				Implementierung		
Bez	Name	St	Format	St	Format	Anwendung / Bemerkung
7224	Package quantity	C	n..8	R	n..6	Actual number of packages , e.g. belonging to a group of packages. Considered to be a number of identical packages.
C531	Packaging details	C		R		
7075	Packaging level code	C	an..3	N		Nicht genutzt
7233	Packaging related description code	C	an..3	R	an..3	**37** Package protection
7073	Packaging terms and conditions code	C	an..3	N		Nicht genutzt
C202	Package type	C		R		
7065	Package type description code	C	an..17	R	an..17	Code of packaging designation (packaging code of customer)
1131	Code list identification code	C	an..17	N		Nicht genutzt
3055	Code list responsible agency code	C	an..3	O	an..3	**92** Assigned by buyer or buyer's agent
7064	Type of packages	C	an..35	N		Nicht genutzt
C402	Package type identification	C		O		
7077	Description format code	M	an..3	M	an..3	**X** Semi-structured (code + text)
7064	Type of packages	M	an..35	M	an..35	Designation of packaging (packaging code of supplier). According to EDIFACT, this element is mandatory. If this DE group is to be used and the supplier has not defined internal packaging codes, enter the same value as in DE 7064 for VDA code.
7143	Item type identification code	C	an..3	O	an..3	**SA** Supplier's article number
7064	Type of packages	C	an..35	O	an..35	Designation of packaging, VDA code list (see separate documentation)
7143	Item type identification code	C	an..3	N		Nicht genutzt
C532	Returnable package details	C		N		Nicht genutzt
8395	Returnable package freight payment responsibility code	C	an..3	N		Nicht genutzt
8393	Returnable package load contents code	C	an..3	N		Nicht genutzt

Beispiel:

```
PAC+9+:37+4A::92+X:080607::080607'
```

Bez =Bezeichner; Nr = Laufende Segmentnummer im Guide; MaxWdh = Maximale Wiederholung; St = Status (M=Muss/Mandatory, C=Conditional, R=Erforderlich/Required, O=Optional, D=Abhängig von/Dependent, A=Empfohlen/Advised)

COPYRIGHT VDA 2026

Segmente

Nr	Bez	St	MaxWdh	Name
	SG19	D	9999	Article and Despatched Article
113	LIN	M	1	Line item

Standard				Implementierung		
Bez	Name	St	Format	St	Format	Anwendung / Bemerkung
1082	Line item identifier	C	an..6	O	an..6	
1229	Action code	C	an..3	N		Nicht genutzt
C212	Item number identification	C		R		
7140	Item identifier	C	an..35	R	an..35	Product identification assigned by buyer / customer
7143	Item type identification code	C	an..3	R	an..3	**IN** Buyer's item number
1131	Code list identification code	C	an..17	N		Nicht genutzt
3055	Code list responsible agency code	C	an..3	N		Nicht genutzt
C829	Sub-line information	C		N		Nicht genutzt
5495	Sub-line indicator code	C	an..3	N		Nicht genutzt
1082	Line item identifier	C	an..6	N		Nicht genutzt
1222	Configuration level number	C	n..2	N		Nicht genutzt
7083	Configuration operation code	C	an..3	N		Nicht genutzt

Beispiel:

```
LIN+1++X:IN'
```

Bez =Bezeichner; Nr = Laufende Segmentnummer im Guide; MaxWdh = Maximale Wiederholung; St = Status (M=Muss/Mandatory, C=Conditional, R=Erforderlich/Required, O=Optional, D=Abhängig von/Dependent, A=Empfohlen/Advised)

COPYRIGHT VDA 2026

Segmente

Nr	Bez	St	MaxWdh	Name
	SG19	D	9999	Article and Despatched Article
114	PIA	O	1	Additional product id

Standard				Implementierung		
Bez	Name	St	Format	St	Format	Anwendung / Bemerkung
4347	Product identifier code qualifier	M	an..3	R	an..3	**1** Additional identification
C212	Item number identification	M		M		
7140	Item identifier	C	an..35	R	an..35	Product identification assigned by supplier
7143	Item type identification code	C	an..3	R	an..3	**SA** Supplier's article number
1131	Code list identification code	C	an..17	N		Nicht genutzt
3055	Code list responsible agency code	C	an..3	N		Nicht genutzt
C212	Item number identification	C		O		
7140	Item identifier	C	an..35	R	an..35	
7143	Item type identification code	C	an..3	R	an..3	**HS** Harmonised system
1131	Code list identification code	C	an..17	N		Nicht genutzt
3055	Code list responsible agency code	C	an..3	N		Nicht genutzt
C212	Item number identification	C		N		Nicht genutzt
7140	Item identifier	C	an..35	N		Nicht genutzt
7143	Item type identification code	C	an..3	N		Nicht genutzt
1131	Code list identification code	C	an..17	N		Nicht genutzt
3055	Code list responsible agency code	C	an..3	N		Nicht genutzt
C212	Item number identification	C		N		Nicht genutzt
7140	Item identifier	C	an..35	N		Nicht genutzt
7143	Item type identification code	C	an..3	N		Nicht genutzt
1131	Code list identification code	C	an..17	N		Nicht genutzt
3055	Code list responsible agency code	C	an..3	N		Nicht genutzt
C212	Item number identification	C		N		Nicht genutzt
7140	Item identifier	C	an..35	N		Nicht genutzt
7143	Item type identification code	C	an..3	N		Nicht genutzt
1131	Code list identification code	C	an..17	N		Nicht genutzt
3055	Code list responsible agency code	C	an..3	N		Nicht genutzt

The seqence of C212 in PIA segments qualified with '1' is free. The first occurence of C212 has to be filled.
Beispiel:

```
PIA+1+X:SA+123ABC:HS'
```

Bez =Bezeichner; Nr = Laufende Segmentnummer im Guide; MaxWdh = Maximale Wiederholung; St = Status (M=Muss/Mandatory, C=Conditional, R=Erforderlich/Required, O=Optional, D=Abhängig von/Dependent, A=Empfohlen/Advised)

COPYRIGHT VDA 2026

Segmente

Nr	Bez	St	MaxWdh	Name
	SG19	D	9999	Article and Despatched Article
115	IMD	O	25	Item description

Standard				Implementierung		
Bez	Name	St	Format	St	Format	Anwendung / Bemerkung
7077	Description format code	C	an..3	N		Nicht genutzt
C272	Item characteristic	C		C		
7081	Item characteristic code	C	an..3	C	an..3	
1131	Code list identification code	C	an..17	N		Nicht genutzt
3055	Code list responsible agency code	C	an..3	N		Nicht genutzt
C273	Item description	C		O		
7009	Item description code	C	an..17	O	an..17	**11** Production JAI004 **12** Sparepart JAI004 **13** Production and sparepart JAI004 **14** Try-out JAI004 **15** Pilot JAI004 **16** Additional requirement JAI004 **17** Initial sample JAI004 **18** Sample JAI004 **19** Other JAI004
1131	Code list identification code	C	an..17	N		Nicht genutzt
3055	Code list responsible agency code	C	an..3	O	an..3	**272** Joint Automotive Industry agency
7008	Item description	C	an..256	O	an..256	Article Description (Line 1) Description / short name of article in plain text.
7008	Item description	C	an..256	O	an..256	Article Description (Line 2)
3453	Language name code	C	an..3	O	an..3	Language code according to ISO 639-1988
7383	Surface or layer code	C	an..3	N		Nicht genutzt

Beispiel:

```
IMD+++19::272:Biegewerkzeug gem. Zeichnung 123::de'
```

Bez =Bezeichner; Nr = Laufende Segmentnummer im Guide; MaxWdh = Maximale Wiederholung; St = Status (M=Muss/Mandatory, C=Conditional, R=Erforderlich/Required, O=Optional, D=Abhängig von/Dependent, A=Empfohlen/Advised)

COPYRIGHT VDA 2026

Segmente

Nr	Bez	St	MaxWdh	Name
	SG19	D	9999	Article and Despatched Article
116	MEA	O	1	Net weight of the product

Standard				Implementierung		
Bez	Name	St	Format	St	Format	Anwendung / Bemerkung
6311	Measurement purpose code qualifier	M	an..3	M	an..3	**PD** Physical dimensions (product ordered)
C502	Measurement details	C		R		
6313	Measured attribute code	C	an..3	O	an..3	**AAL** Net weight
6321	Measurement significance code	C	an..3	N		Nicht genutzt
6155	Non-discrete measurement name code	C	an..17	N		Nicht genutzt
6154	Non-discrete measurement name	C	an..70	N		Nicht genutzt
C174	Value/range	C		R		
6411	Measurement unit code	C	an..8	R	an..3	Article Weight Measure Unit Specifier **KGM** kilogram **GRM** gram **TNE** tonne (metric ton)
6314	Measure	C	an..18	R	n..12	Net Weight Weight (mass) of products including sales packaging
6162	Range minimum quantity	C	n..18	N		Nicht genutzt
6152	Range maximum quantity	C	n..18	N		Nicht genutzt
6432	Significant digits quantity	C	n..2	N		Nicht genutzt
7383	Surface or layer code	C	an..3	N		Nicht genutzt

Beispiel:

```
MEA+PD+AAL+KGM:9'
```

Bez =Bezeichner; Nr = Laufende Segmentnummer im Guide; MaxWdh = Maximale Wiederholung; St = Status (M=Muss/Mandatory, C=Conditional, R=Erforderlich/Required, O=Optional, D=Abhängig von/Dependent, A=Empfohlen/Advised)

COPYRIGHT VDA 2026

Segmente

Nr	Bez	St	MaxWdh	Name
	SG19	D	9999	Article and Despatched Article
117	MEA	D	10	Measurements

Standard				Implementierung		
Bez	Name	St	Format	St	Format	Anwendung / Bemerkung
6311	Measurement purpose code qualifier	M	an..3	M	an..3	**TE** Temperature
C502	Measurement details	C		N		Nicht genutzt
6313	Measured attribute code	C	an..3	N		Nicht genutzt
6321	Measurement significance code	C	an..3	N		Nicht genutzt
6155	Non-discrete measurement name code	C	an..17	N		Nicht genutzt
6154	Non-discrete measurement name	C	an..70	N		Nicht genutzt
C174	Value/range	C		C		
6411	Measurement unit code	C	an..8	R	an..8	**CEL** degree Celsius
6314	Measure	C	an..18	N		Nicht genutzt
6162	Range minimum quantity	C	n..18	D	n..18	
6152	Range maximum quantity	C	n..18	D	n..18	
6432	Significant digits quantity	C	n..2	N		Nicht genutzt
7383	Surface or layer code	C	an..3	N		Nicht genutzt

Beispiel:

```
MEA+TE++CEL:::9'
```

Bez =Bezeichner; Nr = Laufende Segmentnummer im Guide; MaxWdh = Maximale Wiederholung; St = Status (M=Muss/Mandatory, C=Conditional, R=Erforderlich/Required, O=Optional, D=Abhängig von/Dependent, A=Empfohlen/Advised)

COPYRIGHT VDA 2026

Segmente

Nr	Bez	St	MaxWdh	Name
	SG19	D	9999	Article and Despatched Article
118	MEA	O	1	Net explosive mass

Standard				Implementierung		
Bez	Name	St	Format	St	Format	Anwendung / Bemerkung
6311	Measurement purpose code qualifier	M	an..3	M	an..3	**PD** Physical dimensions (product ordered)
C502	Measurement details	C		R		
6313	Measured attribute code	C	an..3	R	an..3	**AFN** Net explosive weight
6321	Measurement significance code	C	an..3	N		Nicht genutzt
6155	Non-discrete measurement name code	C	an..17	N		Nicht genutzt
6154	Non-discrete measurement name	C	an..70	N		Nicht genutzt
C174	Value/range	C		R		
6411	Measurement unit code	C	an..8	R	an..3	Article Weight Measure Unit Specifier **KGM** kilogram **GRM** gram **TNE** tonne (metric ton)
6314	Measure	C	an..18	R	an..18	Net explosive mass of the part
6162	Range minimum quantity	C	n..18	N		Nicht genutzt
6152	Range maximum quantity	C	n..18	N		Nicht genutzt
6432	Significant digits quantity	C	n..2	N		Nicht genutzt
7383	Surface or layer code	C	an..3	N		Nicht genutzt

Beispiel:

MEA+PD+AFN+KGM:9'

Bez =Bezeichner; Nr = Laufende Segmentnummer im Guide; MaxWdh = Maximale Wiederholung; St = Status (M=Muss/Mandatory, C=Conditional, R=Erforderlich/Required, O=Optional, D=Abhängig von/Dependent, A=Empfohlen/Advised)

COPYRIGHT VDA 2026

Segmente

Nr	Bez	St	MaxWdh	Name
	SG19	D	9999	Article and Despatched Article
119	QTY	R	1	Despatched quantity

Standard				Implementierung		
Bez	Name	St	Format	St	Format	Anwendung / Bemerkung
C186	Quantity details	M		M		
6063	Quantity type code qualifier	M	an..3	M	an..3	**12** Despatch quantity
6060	Quantity	M	an..35	M	n..10	Quantity despatched and shipped by the seller/ ship from.
6411	Measurement unit code	C	an..8	R	an..3	Quantity (to be) Despatched Measure Unit Specifier PCE and C62 are ynonymous for piece **C62** one **DR** drum **PCE** piece **SET** set **MTR** metre **CMT** centimetre **MMT** millimetre **MLT** millilitre **MTK** square metre **LEF** leaf **MTQ** cubic metre **LTR** litre **PR** pair **RO** roll **TNE** tonne (metric ton) **KGM** kilogram **GRM** gram **KMT** kilometre

Beispiel:

```
QTY+12:9:C62'
```

Bez =Bezeichner; Nr = Laufende Segmentnummer im Guide; MaxWdh = Maximale Wiederholung; St = Status (M=Muss/Mandatory, C=Conditional, R=Erforderlich/Required, O=Optional, D=Abhängig von/Dependent, A=Empfohlen/Advised)

COPYRIGHT VDA 2026

Segmente

Nr	Bez	St	MaxWdh	Name
	SG19	D	9999	Article and Despatched Article
120	QTY	D	1	Quantity to be delivered

Standard				Implementierung		
Bez	Name	St	Format	St	Format	Anwendung / Bemerkung
C186	Quantity details	M		M		
6063	Quantity type code qualifier	M	an..3	M	an..3	**131** Delivery quantity
6060	Quantity	M	an..35	M	n..10	Quantity ordered by the customer
6411	Measurement unit code	C	an..8	R	an..3	Quantity (to be) Despatched Measure Unit Specifier PCE and C62 are synonyms for "piece". **C62** one **DR** drum **PCE** piece **SET** set **MTR** metre **CMT** centimetre **MMT** millimetre **MTK** square metre **LEF** leaf **MTQ** cubic metre **LTR** litre **PR** pair **RO** roll **TNE** tonne (metric ton) **KGM** kilogram **GRM** gram **KMT** kilometre

This segment is only used in processes where the supplier is entitled to ship quantities that differ from the delivery quantity, whereby the quantity original called by the customer is to be transmitted (e.g. VW AMES-T or VDA 4933 ready for shipping notification).
Beispiel:

QTY+131:9:PCE'

Bez =Bezeichner; Nr = Laufende Segmentnummer im Guide; MaxWdh = Maximale Wiederholung; St = Status (M=Muss/Mandatory, C=Conditional, R=Erforderlich/Required, O=Optional, D=Abhängig von/Dependent, A=Empfohlen/Advised)

COPYRIGHT VDA 2026

Segmente

Nr	Bez	St	MaxWdh	Name
	SG19	D	9999	Article and Despatched Article
121	ALI	O	1	Country of origin, duty regime and nature of transaction

Standard				Implementierung		
Bez	Name	St	Format	St	Format	Anwendung / Bemerkung
3239	Country of origin identifier	C	an..3	O	a2	Country in which the goods have been produced or manufactured; might be required by customs authorities in order to identify the applicable customs tariff, quantity restrictions, etc.
9213	Duty regime type code	C	an..3	D	an..3	Required, if FTX+CUS has been transmitted (declaration of preference). If status is not clear, "N" has to be transmitted. Y = Goods subject to preferential treatment N = Goods not subject to preferential treatment **N** No, origin is not subject to preference JAI010 **Y** Yes, origin is subject to preference JAI010
4183	Special condition code	C	an..3	D	an..3	Dutiable goods indicator **N** no, goods are not subject to customs procedures JAI048 **Y** yes, goods are dutiable/subject to customs procedures JAI048
4183	Special condition code	C	an..3	N		Nicht genutzt
4183	Special condition code	C	an..3	N		Nicht genutzt
4183	Special condition code	C	an..3	N		Nicht genutzt
4183	Special condition code	C	an..3	N		Nicht genutzt

Beispiel:

ALI+DE+N+N'

Bez =Bezeichner; Nr = Laufende Segmentnummer im Guide; MaxWdh = Maximale Wiederholung; St = Status (M=Muss/Mandatory, C=Conditional, R=Erforderlich/Required, O=Optional, D=Abhängig von/Dependent, A=Empfohlen/Advised)

COPYRIGHT VDA 2026

Segmente

Nr	Bez	St	MaxWdh	Name
	SG19	D	9999	Article and Despatched Article
122	FTX	O	1	Article long description

Standard				Implementierung		
Bez	Name	St	Format	St	Format	Anwendung / Bemerkung
4451	Text subject code qualifier	M	an..3	M	an..3	**LIN** Line item
4453	Free text function code	C	an..3	N		Nicht genutzt
C107	Text reference	C		N		Nicht genutzt
4441	Free text description code	M	an..17	N		Nicht genutzt
1131	Code list identification code	C	an..17	N		Nicht genutzt
3055	Code list responsible agency code	C	an..3	N		Nicht genutzt
C108	Text literal	C		R		
4440	Free text	M	an..512	M	an..128	A line of plain, non-structured text information. Information about theft endangered goods, transport insurance etc.
4440	Free text	C	an..512	O	an..128	
4440	Free text	C	an..512	N		Nicht genutzt
4440	Free text	C	an..512	N		Nicht genutzt
4440	Free text	C	an..512	N		Nicht genutzt
3453	Language name code	C	an..3	O	an..3	
4447	Free text format code	C	an..3	N		Nicht genutzt

These free text lines are available for additional article description.
Beispiel:

```
FTX+LIN+++X:X+aa'
```

Bez =Bezeichner; Nr = Laufende Segmentnummer im Guide; MaxWdh = Maximale Wiederholung; St = Status (M=Muss/Mandatory, C=Conditional, R=Erforderlich/Required, O=Optional, D=Abhängig von/Dependent, A=Empfohlen/Advised)

COPYRIGHT VDA 2026

Segmente

Nr	Bez	St	MaxWdh	Name
	SG20	O	1	Shipment / Delivery note reference
123	RFF	M	1	Shipment / Delivery note reference

Standard				Implementierung		
Bez	Name	St	Format	St	Format	Anwendung / Bemerkung
C506	Reference	M		M		
1153	Reference code qualifier	M	an..3	M	an..3	**AAU** Despatch note document identifier
1154	Reference identifier	C	an..70	R	an..70	Delivery note number
1156	Document line identifier	C	an..6	O	an..6	Line number
1056	Version identifier	C	an..9	N		Nicht genutzt
1060	Revision identifier	C	an..6	N		Nicht genutzt

Beispiel:

```
RFF+AAU:X:X'
```

Bez =Bezeichner; Nr = Laufende Segmentnummer im Guide; MaxWdh = Maximale Wiederholung; St = Status (M=Muss/Mandatory, C=Conditional, R=Erforderlich/Required, O=Optional, D=Abhängig von/Dependent, A=Empfohlen/Advised)

COPYRIGHT VDA 2026

Segmente

Nr	Bez	St	MaxWdh	Name
	SG20	O	5	Delivery instruction / schedule reference and item related contact information
				This segment group contains either a reference to the delivery instruction or contact information belonging to the line item (which is used by JAMA/JAPIA) or both. Reference to a delivery instruction or call-off
124	RFF	M	1	Delivery instruction / schedule reference

Standard				Implementierung		
Bez	Name	St	Format	St	Format	Anwendung / Bemerkung
C506	Reference	M		M		
1153	Reference code qualifier	M	an..3	M	an..3	**AAN** Delivery schedule number **AXA** Instruction to despatch reference number
1154	Reference identifier	C	an..70	D	an..70	Unique identifier of a document. Synonym: document number
1156	Document line identifier	C	an..6	O	an..6	Line number
1056	Version identifier	C	an..9	N		Nicht genutzt
1060	Revision identifier	C	an..6	N		Nicht genutzt

Delivery instruction and delivery schedule are used as synonyms!
If the delivery instruction number is available at the time of the transport order issuing, this information can be transmitted as a reference here. If the information is not available, at least the qualifier AAN has to be included, since EDIFACT syntax does not allow empty segments.
Beispiel:

RFF+AAN:X:X'

Bez =Bezeichner; Nr = Laufende Segmentnummer im Guide; MaxWdh = Maximale Wiederholung; St = Status (M=Muss/Mandatory, C=Conditional, R=Erforderlich/Required, O=Optional, D=Abhängig von/Dependent, A=Empfohlen/Advised)

COPYRIGHT VDA 2026

Segmente

Nr	Bez	St	MaxWdh	Name
	SG20	O	5	Delivery instruction / schedule reference and item related contact information
				This segment group contains either a reference to the delivery instruction or contact information belonging to the line item (which is used by JAMA/JAPIA) or both. Reference to a delivery instruction or call-off
125	CTA	O	1	Dispatcher at customer's site who has issued the order / delivery instruction.

Standard				Implementierung		
Bez	Name	St	Format	St	Format	Anwendung / Bemerkung
3139	Contact function code	C	an..3	R	an..3	**SC** Schedule contact
C056	Contact details	C		O		
3413	Contact identifier	C	an..17	O	an..17	Identifies the department or employee by a unique identifier other than their name when given as a contact.
3412	Contact name	C	an..256	O	an..256	Name and contact information of the dispatcher at the buyer Name of the contact person or department

Beispiel:

```
CTA+SC+X:Helga Müller Tel.?: ?+49 30 8978 42123'
```

Bez =Bezeichner; Nr = Laufende Segmentnummer im Guide; MaxWdh = Maximale Wiederholung; St = Status (M=Muss/Mandatory, C=Conditional, R=Erforderlich/Required, O=Optional, D=Abhängig von/Dependent, A=Empfohlen/Advised)

COPYRIGHT VDA 2026

Segmente

Nr	Bez	St	MaxWdh	Name
	SG20	O	1	Order reference
126	RFF	M	1	Order reference

Standard				Implementierung		
Bez	Name	St	Format	St	Format	Anwendung / Bemerkung
C506	Reference	M		M		
1153	Reference code qualifier	M	an..3	M	an..3	**ON** Order document identifier, buyer assigned
1154	Reference identifier	C	an..70	R	an..70	Unique identifier of an order document.
1156	Document line identifier	C	an..6	O	an..6	Line number
1056	Version identifier	C	an..9	N		Nicht genutzt
1060	Revision identifier	C	an..6	N		Nicht genutzt

Refernce to a related Order message / line
Beispiel:

```
RFF+ON:Eindeutiger Identifier der Bestellung:1'
```

Bez =Bezeichner; Nr = Laufende Segmentnummer im Guide; MaxWdh = Maximale Wiederholung; St = Status (M=Muss/Mandatory, C=Conditional, R=Erforderlich/Required, O=Optional, D=Abhängig von/Dependent, A=Empfohlen/Advised)

COPYRIGHT VDA 2026

Segmente

Nr	Bez	St	MaxWdh	Name
	SG21	O	1	Dangerous goods information
127	DGS	M	1	Dangerous goods

Standard				Implementierung		
Bez	Name	St	Format	St	Format	Anwendung / Bemerkung
8273	Dangerous goods regulations code	C	an..3	O	an..3	
C205	Hazard code	C		N		Nicht genutzt
8351	Hazard identification code	M	an..7	N		Nicht genutzt
8078	Additional hazard classification identifier	C	an..7	N		Nicht genutzt
8092	Hazard code version identifier	C	an..10	N		Nicht genutzt
C234	UNDG information	C		R		
7124	United Nations Dangerous Goods (UNDG) identifier	C	n4	R	n4	Four-digit UNDG code (United Nations Dangerous Goods) - identification number assigned to the hazardous substance according to the UNDG regulations.
7088	Dangerous goods flashpoint description	C	an..8	N		Nicht genutzt
C223	Dangerous goods shipment flashpoint	C		O		Flashpoint of a product (being pure, dissolved or mixed) that is unequivocally proved by test and therefore relevant for transportation purposes.
7106	Shipment flashpoint degree	C	n3	R	n3	Flashpoint temperature
6411	Measurement unit code	C	an..8	R	an..8	**CEL** degree Celsius
8339	Packaging danger level code	C	an..3	N		Nicht genutzt
8364	Emergency procedure for ships identifier	C	an..8	N		Nicht genutzt
8410	Hazard medical first aid guide identifier	C	an..4	N		Nicht genutzt
8126	Transport emergency card identifier	C	an..10	N		Nicht genutzt
C235	Hazard identification placard details	C		N		Nicht genutzt
8158	Orange hazard placard upper part identifier	C	an..4	N		Nicht genutzt
8186	Orange hazard placard lower part identifier	C	an4	N		Nicht genutzt
C236	Dangerous goods label	C		N		Nicht genutzt
8246	Dangerous goods marking identifier	C	an..4	N		Nicht genutzt
8246	Dangerous goods marking identifier	C	an..4	N		Nicht genutzt
8246	Dangerous goods marking identifier	C	an..4	N		Nicht genutzt
8246	Dangerous goods marking identifier	C	an..4	N		Nicht genutzt
8255	Packing instruction type code	C	an..3	N		Nicht genutzt
8179	Transport means description code	C	an..8	N		Nicht genutzt
8211	Hazardous cargo transport authorisation code	C	an..3	N		Nicht genutzt
C289	Tunnel Restriction	C		N		Nicht genutzt
8461	Tunnel Restriction Code	C	an..6	N		Nicht genutzt

Bez =Bezeichner; Nr = Laufende Segmentnummer im Guide; MaxWdh = Maximale Wiederholung; St = Status (M=Muss/Mandatory, C=Conditional, R=Erforderlich/Required, O=Optional, D=Abhängig von/Dependent, A=Empfohlen/Advised)

COPYRIGHT VDA 2026

Segmente

Standard				Implementierung		
Bez	Name	St	Format	St	Format	Anwendung / Bemerkung
1131	Code list identification code	C	an..17	N		Nicht genutzt
3055	Code list responsible agency code	C	an..3	N		Nicht genutzt

Beispiel:

```
DGS+ADR++1868+500:CEL'
```

Bez =Bezeichner; Nr = Laufende Segmentnummer im Guide; MaxWdh = Maximale Wiederholung; St = Status (M=Muss/Mandatory, C=Conditional, R=Erforderlich/Required, O=Optional, D=Abhängig von/Dependent, A=Empfohlen/Advised)

COPYRIGHT VDA 2026

Segmente

Nr	Bez	St	MaxWdh	Name
	SG21	O	1	Dangerous goods information
128	QTY	O	1	Quantity of the hazardous substance summarily contained in the delivery quantity

Standard				Implementierung		
Bez	Name	St	Format	St	Format	Anwendung / Bemerkung
C186	Quantity details	M		M		
6063	Quantity type code qualifier	M	an..3	M	an..3	**490** Constituent element or component quantity
6060	Quantity	M	an..35	M	n..9	Quantity of the hazardous substance
6411	Measurement unit code	C	an..8	R	an..8	**LTR** litre **KGM** kilogram **GRM** gram

Beispiel:

QTY+490:9:KGM'

Bez =Bezeichner; Nr = Laufende Segmentnummer im Guide; MaxWdh = Maximale Wiederholung; St = Status (M=Muss/Mandatory, C=Conditional, R=Erforderlich/Required, O=Optional, D=Abhängig von/Dependent, A=Empfohlen/Advised)

COPYRIGHT VDA 2026

Segmente

Nr	Bez	St	MaxWdh	Name
	SG21	O	1	Dangerous goods information
129	FTX	O	1	Dangerous goods description

Standard				Implementierung		
Bez	Name	St	Format	St	Format	Anwendung / Bemerkung
4451	Text subject code qualifier	M	an..3	M	an..3	**AAD** Dangerous goods technical name
4453	Free text function code	C	an..3	N		Nicht genutzt
C107	Text reference	C		N		Nicht genutzt
4441	Free text description code	M	an..17	N		Nicht genutzt
1131	Code list identification code	C	an..17	N		Nicht genutzt
3055	Code list responsible agency code	C	an..3	N		Nicht genutzt
C108	Text literal	C		R		
4440	Free text	M	an..512	M	an..256	Dangerous goods description text line.
4440	Free text	C	an..512	O	an..256	Dangerous goods description text line.
4440	Free text	C	an..512	O	an..256	Free text - hazardous goods description
4440	Free text	C	an..512	O	an..256	Free text - hazardous goods description
4440	Free text	C	an..512	O	an..256	Free text - hazardous goods description
3453	Language name code	C	an..3	O	an..3	
4447	Free text format code	C	an..3	N		Nicht genutzt

Beispiel:

```
FTX+AAD+++Dangerous goods description1:Dangerous goods description2:::X+en
'
```

Bez =Bezeichner; Nr = Laufende Segmentnummer im Guide; MaxWdh = Maximale Wiederholung; St = Status (M=Muss/Mandatory, C=Conditional, R=Erforderlich/Required, O=Optional, D=Abhängig von/Dependent, A=Empfohlen/Advised)

COPYRIGHT VDA 2026

Segmente

Nr	Bez	St	MaxWdh	Name
	SG21	O	1	Dangerous goods information
130	FTX	O	1	Dangerous goods declaration exception

Standard				Implementierung		
Bez	Name	St	Format	St	Format	Anwendung / Bemerkung
4451	Text subject code qualifier	M	an..3	M	an..3	**HAZ** Hazard information
4453	Free text function code	C	an..3	N		Nicht genutzt
C107	Text reference	C		N		Nicht genutzt
4441	Free text description code	M	an..17	N		Nicht genutzt
1131	Code list identification code	C	an..17	N		Nicht genutzt
3055	Code list responsible agency code	C	an..3	N		Nicht genutzt
C108	Text literal	C		R		
4440	Free text	M	an..512	M	an..128	Dangerous goods declaration exception text line
4440	Free text	C	an..512	O	an..128	Dangerous goods declaration exception text line
4440	Free text	C	an..512	N		Nicht genutzt
4440	Free text	C	an..512	N		Nicht genutzt
4440	Free text	C	an..512	N		Nicht genutzt
3453	Language name code	C	an..3	O	an..3	
4447	Free text format code	C	an..3	N		Nicht genutzt

Beispiel:

```
FTX+HAZ+++Informationen zu Ausnahmeregelung1:Informationen zu Ausnahmerege
lung2+en'
```

Bez =Bezeichner; Nr = Laufende Segmentnummer im Guide; MaxWdh = Maximale Wiederholung; St = Status (M=Muss/Mandatory, C=Conditional, R=Erforderlich/Required, O=Optional, D=Abhängig von/Dependent, A=Empfohlen/Advised)

COPYRIGHT VDA 2026

Segmente

Nr	Bez	St	MaxWdh	Name
	SG22	O	1	Place of discharge
131	LOC	M	1	Place of discharge

Standard				Implementierung		
Bez	Name	St	Format	St	Format	Anwendung / Bemerkung
3227	Location function code qualifier	M	an..3	M	an..3	**11** Place of discharge
C517	Location identification	C		O		
3225	Location identifier	C	an..35	O	an..35	Identifier of location, site, etc.
1131	Code list identification code	C	an..17	N		Nicht genutzt
3055	Code list responsible agency code	C	an..3	O	an..3	Code specifying the agency responsible for a code list.
3224	Location name	C	an..256	O	an..256	Name of place/location; if necessary, use complete address.
C519	Related location one identification	C		N		Nicht genutzt
3223	First related location identifier	C	an..35	N		Nicht genutzt
1131	Code list identification code	C	an..17	N		Nicht genutzt
3055	Code list responsible agency code	C	an..3	N		Nicht genutzt
3222	First related location name	C	an..70	N		Nicht genutzt
C553	Related location two identification	C		O		
3233	Second related location identifier	C	an..35	O	an..35	Additional location ID
1131	Code list identification code	C	an..17	N		Nicht genutzt
3055	Code list responsible agency code	C	an..3	D	an..3	Code specifying the agency responsible for a code list. Has to be provided if 3233 is used. **10** ODETTE **16** US, D&B (Dun & Bradstreet Corporation) **91** Assigned by seller or seller's agent **92** Assigned by buyer or buyer's agent
3232	Second related location name	C	an..70	O	an..70	Additional location text
5479	Relation code	C	an..3	N		Nicht genutzt

At VW, LOC+11 is not used as a (physical) unloading point but serves as an internal warehouse group.
This reference must be transmitted at item level and corresponds to LOC+7. Use this LOC only for VW!
Beispiel:

```
LOC+11+Entladeort Id::92:Entladeort++:::X'
```

Bez =Bezeichner; Nr = Laufende Segmentnummer im Guide; MaxWdh = Maximale Wiederholung; St = Status (M=Muss/Mandatory, C=Conditional, R=Erforderlich/Required, O=Optional, D=Abhängig von/Dependent, A=Empfohlen/Advised)

COPYRIGHT VDA 2026

Segmente

Nr	Bez	St	MaxWdh	Name
	SG22	O	1	Internal place of destination
				An internal location within the ship-to's premises, where goods are moved to after they have been unloaded, e.g. an assembly line, an internal warehouse, etc.
132	LOC	M	1	Internal place of destination

Standard				Implementierung		
Bez	Name	St	Format	St	Format	Anwendung / Bemerkung
3227	Location function code qualifier	M	an..3	M	an..3	7 - internal place of destination, e.g. warehouse / supermarket **7** Place of delivery
C517	Location identification	C		R		
3225	Location identifier	C	an..35	O	an..35	Identifier of location, site, etc.
1131	Code list identification code	C	an..17	N		Nicht genutzt
3055	Code list responsible agency code	C	an..3	O	an..3	Code specifying the agency responsible for a code list.
3224	Location name	C	an..256	O	an..256	Name of place/location; if necessary, use complete address.
C519	Related location one identification	C		N		Nicht genutzt
3223	First related location identifier	C	an..35	N		Nicht genutzt
1131	Code list identification code	C	an..17	N		Nicht genutzt
3055	Code list responsible agency code	C	an..3	N		Nicht genutzt
3222	First related location name	C	an..70	N		Nicht genutzt
C553	Related location two identification	C		O		
3233	Second related location identifier	C	an..35	O	an..35	Additional location ID
1131	Code list identification code	C	an..17	N		Nicht genutzt
3055	Code list responsible agency code	C	an..3	D	an..3	Code specifying the agency responsible for a code list. Has to be provided if 3233 is used. **10** ODETTE **16** US, D&B (Dun & Bradstreet Corporation) **91** Assigned by seller or seller's agent **92** Assigned by buyer or buyer's agent
3232	Second related location name	C	an..70	O	an..70	Additional location text
5479	Relation code	C	an..3	N		Nicht genutzt

Beispiel:

```
LOC+7+Interner Bestimmungsort Id::92:Interner Bestimmungsort++:::X'
```

Bez =Bezeichner; Nr = Laufende Segmentnummer im Guide; MaxWdh = Maximale Wiederholung; St = Status (M=Muss/Mandatory, C=Conditional, R=Erforderlich/Required, O=Optional, D=Abhängig von/Dependent, A=Empfohlen/Advised)

COPYRIGHT VDA 2026

Segmente

Nr	Bez	St	MaxWdh	Name
133	UNT	M	1	Message trailer

Standard				Implementierung		
Bez	Name	St	Format	St	Format	Anwendung / Bemerkung
0074	Number of segments in the message	M	n..6	M	n..6	Number of segments in the message
0062	Message reference number	M	an..14	M	an..14	Message reference number

Beispiel:

```
UNT+114+9'
```

Bez =Bezeichner; Nr = Laufende Segmentnummer im Guide; MaxWdh = Maximale Wiederholung; St = Status (M=Muss/Mandatory, C=Conditional, R=Erforderlich/Required, O=Optional, D=Abhängig von/Dependent, A=Empfohlen/Advised)

COPYRIGHT VDA 2026

Segmente

Nr	Bez	St	MaxWdh	Name
134	UNZ	M	1	Interchange trailer

Standard				Implementierung		
Bez	Name	St	Format	St	Format	Anwendung / Bemerkung
0036	Interchange control count	M	n..6	M	n..6	
0020	Interchange control reference	M	an..14	M	an..14	

Beispiel:

```
UNZ+1+2022000025'
```

Bez =Bezeichner; Nr = Laufende Segmentnummer im Guide; MaxWdh = Maximale Wiederholung; St = Status (M=Muss/Mandatory, C=Conditional, R=Erforderlich/Required, O=Optional, D=Abhängig von/Dependent, A=Empfohlen/Advised)

COPYRIGHT VDA 2026

Applicable codes

0001 Syntax identifier

Code	Name/description	Code list
UNOA	UN/ECE level A	0001
UNOB	UN/ECE level B	0001
UNOC	UN/ECE level C	0001
UNOD	UN/ECE level D	0001
UNOW	UN/ECE level W	0001

0002 Syntax version number

Code	Name/description	Code list
X	Syntax version 4 ISO 9735-11 profile.	0002

0007 Partner identification code qualifier

Code	Name/description	Code list
1	DUNS (Data Universal Numbering System)	0007
4	IATA (International Air Transport Association)	0007
5	INSEE (Institut National de la Statistique et des Etudes Economiques) - SIRET	0007
8	UCC Communications ID (Uniform Code Council Communications Identifier)	0007
9	DUNS (Data Universal Numbering System) with 4 digit suffix	0007
12	Telephone number	0007
14	GS1	0007
18	AIAG (Automotive Industry Action Group)	0007
22	INSEE (Institut National de la Statistique et des Etudes Economiques) - SIREN	0007
30	ISO 6523: Organization identification	0007
31	DIN (Deutsches Institut fuer Normung)	0007
33	BfA (Bundesversicherungsanstalt fuer Angestellte)	0007
34	National Statistical Agency	0007
51	GEIS (General Electric Information Services)	0007
52	INS (IBM Network Services)	0007
53	Datenzentrale des Einzelhandels	0007
54	Bundesverband der Deutschen Baustoffhaendler	0007
55	Bank identifier code	0007
57	KTNet (Korea Trade Network Services)	0007
58	UPU (Universal Postal Union)	0007
59	ODETTE (Organization for Data Exchange through Tele- Transmission in Europe)	0007
61	SCAC (Standard Carrier Alpha Code)	0007
63	ECA (Electronic Commerce Australia)	0007
65	TELEBOX 400 (Deutsche Telekom)	0007
80	NHS (National Health Service)	0007
82	Statens Teleforvaltning	0007
84	Athens Chamber of Commerce	0007
85	Swiss Chamber of Commerce	0007
86	US Council for International Business	0007
87	National Federation of Chambers of Commerce and Industry	0007
89	Association of British Chambers of Commerce	0007
90	SITA (Societe Internationale de Telecommunications Aeronautiques)	0007
91	Assigned by seller or seller's agent	0007
92	Assigned by buyer or buyer's agent	0007
103	TW, Trade-van	0007
128	CH, BCNR (Swiss Clearing Bank Number)	0007
129	CH, BPI (Swiss Business Partner Identification)	0007
144	US, DoDAAC (Department of Defense Activity Address Code)	0007
145	FR, DGCP (Direction Generale de la Comptabilite Publique)	0007
146	FR, DGI (Direction Generale des Impots)	0007
147	JP, JIPDEC/ECPC (Japan Information Processing Development Corporation / Electronic Commerce Promotion Center)	0007

COPYRIGHT VDA 2026

Applicable codes

Code	Name/description	Code list
148	ITU (International Telecommunications Union) Data Network Identification Code (DNIC)	0007
500	DE, BDEW (Bundesverband der Energie- und Wasserwirtschaft e.V.)	0007
501	EASEE-gas (European Association for the Streamlining of Energy Exchange)	0007
502	DE, DVGW (Deutsche Vereinigung des Gas- und Wasserfaches e.V.)	0007
Z01	Vehicle registration number	0007
ZZZ	Mutually defined	0007
0035	Test indicator	
Code	Name/description	Code list
1	Interchange is a test	0035
0051	Controlling agency	
Code	Name/description	Code list
UN	UN/CEFACT	0051
0052	Message version number	
Code	Name/description	Code list
D	Draft version/UN/EDIFACT Directory	0052
0054	Message release number	
Code	Name/description	Code list
20B	Release 2020 - B	0054
0057	Association assigned code	
Code	Name/description	Code list
GAVI33	VDA DESADV - Transport order V3.3	JAI016
0065	Message type	
Code	Name/description	Code list
DESADV	Despatch advice message	0065
1001	Document name code	
Code	Name/description	Code list
343	Cartage order (local transport)	1001
345	Ready for despatch advice	1001
1153	Reference code qualifier	
Code	Name/description	Code list
AAN	Delivery schedule number	1153
AAU	Despatch note document identifier	1153
ABE	Declarant's reference number	1153
ABT	Goods declaration document identifier, Customs	1153
AGK	Application reference number	1153
AKI	Ordering customer's second reference number	1153
AKT	Forwarding order number	1153
ANK	Reference number assigned by third party	1153
AOZ	Implementation version number	1153
AWU	Pick-up sheet number	1153
AXA	Instruction to despatch reference number	1153
CRN	Transport means journey identifier	1153
FC	Fiscal number	1153
ON	Order document identifier, buyer assigned	1153
PE	Plant number	1153
VA	VAT registration number	1153
1225	Message function code	
Code	Name/description	Code list
1	Cancellation	1225

COPYRIGHT VDA 2026

Applicable codes

Code	Name/description	Code list
5	Replace	1225
9	Original	1225
15	Reminder	1225

2005 Date or time or period function code qualifier

Code	Name/description	Code list
2	Delivery date/time, requested	2005
10	Shipment date/time, requested	2005
110	Ship date, originally scheduled	2005
132	Transport means arrival date time, estimated	2005
133	Transport means departure date/time, estimated	2005
136	Transport means departure date time, actual	2005
137	Document issue date time	2005
178	Transport means arrival date time, actual	2005

2379 Date or time or period format code

Code	Name/description	Code list
102	CCYYMMDD	2379
203	CCYYMMDDHHMM	2379
205	CCYYMMDDHHMMZHHMM	2379
719	CCYYMMDDHHMM-CCYYMMDDHHMM	2379
721	CCYYMMDDHHMMZHHMM-CCYYMMDDHHMMZHHMM	2379

3035 Party function code qualifier

Code	Name/description	Code list
BY	Buyer	3035
FW	Freight forwarder	3035
OY	Ordering customer	3035
SE	Seller	3035
SF	Ship from	3035
ST	Ship to	3035
UD	Ultimate customer	3035

3055 Code list responsible agency code

Code	Name/description	Code list
1	CCC (Customs Co-operation Council)	3055
2	CEC (Commission of the European Communities)	3055
3	IATA (International Air Transport Association)	3055
4	ICC (International Chamber of Commerce)	3055
5	ISO (International Organization for Standardization)	3055
6	UN/ECE (United Nations - Economic Commission for Europe)	3055
7	CEFIC (Conseil Europeen des Federations de l'Industrie Chimique)	3055
8	EDIFICE	3055
9	EAN (International Article Numbering association)	3055
10	ODETTE	3055
11	Lloyd's register of shipping	3055
12	UIC (International union of railways)	3055
13	ICAO (International Civil Aviation Organization)	3055
14	ICS (International Chamber of Shipping)	3055
15	RINET (Reinsurance and Insurance Network)	3055
16	US, D&B (Dun & Bradstreet Corporation)	3055
17	S.W.I.F.T.	3055
18	Conventions on SAD and transit (EC and EFTA)	3055
19	FRRC (Federal Reserve Routing Code)	3055
20	BIC (Bureau International des Containeurs)	3055
21	Assigned by transport company	3055

COPYRIGHT VDA 2026

Applicable codes

Code	Name/description	Code list
22	US, ISA (Information Systems Agreement)	3055
23	FR, EDITRANSPORT	3055
24	AU, ROA (Railways of Australia)	3055
25	EDITEX (Europe)	3055
26	NL, Foundation Uniform Transport Code	3055
27	US, FDA (Food and Drug Administration)	3055
28	EDITEUR (European book sector electronic data interchange group)	3055
29	GB, FLEETNET	3055
30	GB, ABTA (Association of British Travel Agencies)	3055
31	FI, Finish State Railway	3055
32	PL, Polish State Railway	3055
33	BG, Bulgaria State Railway	3055
34	RO, Rumanian State Railway	3055
35	CZ, Tchechian State Railway	3055
36	HU, Hungarian State Railway	3055
37	GB, British Railways	3055
38	ES, Spanish National Railway	3055
39	SE, Swedish State Railway	3055
40	NO, Norwegian State Railway	3055
41	DE, German Railway	3055
42	AT, Austrian Federal Railways	3055
43	LU, Luxembourg National Railway Company	3055
44	IT, Italian State Railways	3055
45	NL, Netherlands Railways	3055
46	CH, Swiss Federal Railways	3055
47	DK, Danish State Railways	3055
48	FR, French National Railway Company	3055
49	BE, Belgian National Railway Company	3055
50	PT, Portuguese Railways	3055
51	SK, Slovakian State Railways	3055
52	IE, Irish Transport Company	3055
53	FIATA (International Federation of Freight Forwarders Associations)	3055
54	IMO (International Maritime Organisation)	3055
55	US, DOT (United States Department of Transportation)	3055
56	TW, Trade-van	3055
57	TW, Chinese Taipei Customs	3055
58	EUROFER	3055
59	DE, EDIBAU	3055
60	Assigned by national trade agency	3055
61	Association Europeenne des Constructeurs de Materiel Aerospatial (AECMA)	3055
62	US, DIstilled Spirits Council of the United States (DISCUS)	3055
63	North Atlantic Treaty Organization (NATO)	3055
64	FR, EDIFRANCE	3055
65	FR, GENCOD	3055
66	MY, Malaysian Customs and Excise	3055
67	MY, Malaysia Central Bank	3055
68	IT, INDICOD/EAN Italy	3055
69	US, National Alcohol Beverage Control Association (NABCA)	3055
70	MY, Dagang.Net	3055
71	US, FCC (Federal Communications Commission)	3055
72	US, MARAD (Maritime Administration)	3055
73	US, DSAA (Defense Security Assistance Agency)	3055
74	US, NRC (Nuclear Regulatory Commission)	3055
75	US, ODTC (Office of Defense Trade Controls)	3055
76	US, ATF (Bureau of Alcohol, Tobacco and Firearms)	3055

COPYRIGHT VDA 2026

Applicable codes

Code	Name/description	Code list
77	US, BXA (Bureau of Export Administration)	3055
78	US, FWS (Fish and Wildlife Service)	3055
79	US, OFAC (Office of Foreign Assets Control)	3055
80	BRMA/RAA - LIMNET - RINET Joint Venture	3055
81	RU, (SFT) Society for Financial Telecommunications	3055
82	NO, Enhetsregisteret ved Bronnoysundregisterne	3055
83	US, National Retail Federation	3055
84	DE, BRD (Gesetzgeber der Bundesrepublik Deutschland)	3055
85	North America, Telecommunications Industry Forum	3055
86	Assigned by party originating the message	3055
87	Assigned by carrier	3055
88	Assigned by owner of operation	3055
89	Assigned by distributor	3055
90	Assigned by manufacturer	3055
91	Assigned by seller or seller's agent	3055
92	Assigned by buyer or buyer's agent	3055
93	AT, Austrian Customs	3055
94	AT, Austrian PTT	3055
95	AU, Australian Customs Service	3055
96	CA, Revenue Canada, Customs and Excise	3055
97	CH, Administration federale des contributions	3055
98	CH, Direction generale des douanes	3055
99	CH, Division des importations et exportations, OFAEE	3055
100	CH, Entreprise des PTT	3055
101	CH, Carbura	3055
102	CH, Centrale suisse pour l'importation du charbon	3055
103	CH, Office fiduciaire des importateurs de denrees alimentaires	3055
104	CH, Association suisse code des articles	3055
105	DK, Ministry of taxation, Central Customs and Tax Administration	3055
106	FR, Direction generale des douanes et droits indirects	3055
107	FR, INSEE	3055
108	FR, Banque de France	3055
109	GB, H.M. Customs & Excise	3055
110	IE, Revenue Commissioners, Customs AEP project	3055
111	US, U.S. Customs Service	3055
112	US, U.S. Census Bureau	3055
113	US, UCC (Uniform Code Council)	3055
114	US, ABA (American Bankers Association)	3055
115	US, DODAAC (Department Of Defense Active Agency Code)	3055
116	US, ANSI ASC X12	3055
117	AT, Geldausgabeautomaten-Service Gesellschaft m.b.H.	3055
118	SE, Svenska Bankfoereningen	3055
119	IT, Associazione Bancaria Italiana	3055
120	IT, Socieata' Interbancaria per l'Automazione	3055
121	CH, Telekurs AG	3055
122	CH, Swiss Securities Clearing Corporation	3055
123	NO, Norwegian Interbank Research Organization	3055
124	NO, Norwegian Bankers' Association	3055
125	FI, The Finnish Bankers' Association	3055
126	US, NCCMA (Account Analysis Codes)	3055
127	DE, ARE (AbRechnungs Einheit)	3055
128	BE, Belgian Bankers' Association	3055
129	BE, Belgian Ministry of Finance	3055
130	DK, Danish Bankers Association	3055
131	DE, German Bankers Association	3055

COPYRIGHT VDA 2026

Applicable codes

Code	Name/description	Code list
132	GB, BACS Limited	3055
133	GB, Association for Payment Clearing Services	3055
134	GB, APACS (Association of payment clearing services)	3055
135	GB, The Clearing House	3055
136	GB, Article Number Association (UK) Limited	3055
137	AT, Verband oesterreichischer Banken und Bankiers	3055
138	FR, CFONB (Comite francais d'organ. et de normalisation bancaires)	3055
139	UPU (Universal Postal Union)	3055
140	CEC (Commission of the European Communities), DG/XXI-01	3055
141	CEC (Commission of the European Communities), DG/XXI-B-1	3055
142	CEC (Commission of the European Communities), DG/XXXIV	3055
143	NZ, New Zealand Customs	3055
144	NL, Netherlands Customs	3055
145	SE, Swedish Customs	3055
146	DE, German Customs	3055
147	BE, Belgian Customs	3055
148	ES, Spanish Customs	3055
149	IL, Israel Customs	3055
150	HK, Hong Kong Customs	3055
151	JP, Japan Customs	3055
152	SA, Saudi Arabia Customs	3055
153	IT, Italian Customs	3055
154	GR, Greek Customs	3055
155	PT, Portuguese Customs	3055
156	LU, Luxembourg Customs	3055
157	NO, Norwegian Customs	3055
158	FI, Finnish Customs	3055
159	IS, Iceland Customs	3055
160	LI, Liechtenstein authority	3055
161	UNCTAD (United Nations - Conference on Trade And Development)	3055
162	CEC (Commission of the European Communities), DG/XIII-D-5	3055
163	US, FMC (Federal Maritime Commission)	3055
164	US, DEA (Drug Enforcement Agency)	3055
165	US, DCI (Distribution Codes, INC.)	3055
166	US, National Motor Freight Classification Association	3055
167	US, AIAG (Automotive Industry Action Group)	3055
168	US, FIPS (Federal Information Publishing Standard)	3055
169	CA, SCC (Standards Council of Canada)	3055
170	CA, CPA (Canadian Payment Association)	3055
171	NL, Interpay Girale Services	3055
172	NL, Interpay Debit Card Services	3055
173	NO, NORPRO	3055
174	DE, DIN (Deutsches Institut fuer Normung)	3055
175	FCI (Factors Chain International)	3055
176	BR, Banco Central do Brazil	3055
177	AU, LIFA (Life Insurance Federation of Australia)	3055
178	AU, SAA (Standards Association of Australia)	3055
179	US, Air transport association of America	3055
180	DE, BIA (Berufsgenossenschaftliches Institut fuer Arbeitssicherheit)	3055
181	Edibuild	3055
182	US, Standard Carrier Alpha Code (Motor)	3055
183	US, American Petroleum Institute	3055
184	AU, ACOS (Australian Chamber of Shipping)	3055
185	DE, BDI (Bundesverband der Deutschen Industrie e.V.)	3055
186	US, GSA (General Services Administration)	3055

COPYRIGHT VDA 2026

Applicable codes

Code	Name/description	Code list
187	US, DLMSO (Defense Logistics Management Standards Office)	3055
188	US, NIST (National Institute of Standards and Technology)	3055
189	US, DoD (Department of Defense)	3055
190	US, VA (Department of Veterans Affairs)	3055
191	IAPSO (United Nations Inter-Agency Procurement Services Office)	3055
192	Shipper's association	3055
193	EU, European Telecommunications Informatics Services (ETIS)	3055
194	AU, AQIS (Australian Quarantine and Inspection Service)	3055
195	CO, DIAN (Direccion de Impuestos y Aduanas Nacionales)	3055
196	US, COPAS (Council of Petroleum Accounting Society)	3055
197	US, DISA (Data Interchange Standards Association)	3055
198	CO, Superintendencia Bancaria De Colombia	3055
199	FR, Direction de la Comptabilite Publique	3055
200	NL, EAN Netherlands	3055
201	US, WSSA(Wine and Spirits Shippers Association)	3055
202	PT, Banco de Portugal	3055
203	FR, GALIA (Groupement pour l'Amelioration des Liaisons dans l'Industrie Automobile)	3055
204	DE, VDA (Verband der Automobilindustrie E.V.)	3055
205	IT, ODETTE Italy	3055
206	NL, ODETTE Netherlands	3055
207	ES, ODETTE Spain	3055
208	SE, ODETTE Sweden	3055
209	GB, ODETTE United Kingdom	3055
210	EU, EDI for financial, informational, cost, accounting, auditing and social areas (EDIFICAS) - Europe	3055
211	FR, EDI for financial, informational, cost, accounting, auditing and social areas (EDIFICAS) - France	3055
212	DE, Deutsch Telekom AG	3055
213	JP, NACCS Center (Nippon Automated Cargo Clearance System Operations Organization)	3055
214	US, AISI (American Iron and Steel Institute)	3055
215	AU, APCA (Australian Payments Clearing Association)	3055
216	US, Department of Labor	3055
217	US, N.A.I.C. (National Association of Insurance Commissioners)	3055
218	GB, The Association of British Insurers	3055
219	FR, d'ArvA	3055
220	FI, Finnish tax board	3055
221	FR, CNAMTS (Caisse Nationale de l'Assurance Maladie des Travailleurs Salaries)	3055
222	DK, Danish National Board of Health	3055
223	DK, Danish Ministry of Home Affairs	3055
224	US, Aluminum Association	3055
225	US, CIDX (Chemical Industry Data Exchange)	3055
226	US, Carbide Manufacturers	3055
227	US, NWDA (National Wholesale Druggist Association)	3055
228	US, EIA (Electronic Industry Association)	3055
229	US, American Paper Institute	3055
230	US, VICS (Voluntary Inter-Industry Commerce Standards)	3055
231	Copper and Brass Fabricators Council	3055
232	GB, Inland Revenue	3055
233	US, OMB (Office of Management and Budget)	3055
234	DE, Siemens AG	3055
235	AU, Tradegate (Electronic Commerce Australia)	3055
236	US, United States Postal Service (USPS)	3055
237	US, United States health industry	3055
238	US, TDCC (Transportation Data Coordinating Committee)	3055

COPYRIGHT VDA 2026

Applicable codes

Code	Name/description	Code list
239	US, HL7 (Health Level 7)	3055
240	US, CHIPS (Clearing House Interbank Payment Systems)	3055
241	PT, SIBS (Sociedade Interbancaria de Servicos)	3055
242	NL, Interpay Giraal	3055
243	NL, Interpay Cards	3055
244	US, Department of Health and Human Services	3055
245	DK, EAN (European Article Numbering) Denmark	3055
246	DE, Centrale fuer Coorganisation GMBH	3055
247	US, HBICC (Health Industry Business Communication Council)	3055
248	US, ASTM (American Society of Testing and Materials)	3055
249	IP (Institute of Petroleum)	3055
250	US, UOP (Universal Oil Products)	3055
251	AU, HIC (Health Insurance Commission)	3055
252	AU, AIHW (Australian Institute of Health and Welfare)	3055
253	AU, NCCH (National Centre for Classification in Health)	3055
254	AU, DOH (Australian Department of Health)	3055
255	AU, ADA (Australian Dental Association)	3055
256	US, AAR (Association of American Railroads)	3055
257	ECCMA (Electronic Commerce Code Management Association)	3055
258	JP, Japanese Ministry of Transport	3055
259	JP, Japanese Maritime Safety Agency	3055
260	Ediel Nordic forum	3055
261	EEG7, European Expert Group 7 (Insurance)	3055
262	DE, GDV (Gesamtverband der Deutschen Versicherungswirtschaft e.V.)	3055
263	CA, CSIO (Centre for Study of Insurance Operations)	3055
264	FR, AGF (Assurances Generales de France)	3055
265	SE, Central bank	3055
266	US, DoA (Department of Agriculture)	3055
267	RU, Central Bank of Russia	3055
268	FR, DGI (Direction Generale des Impots)	3055
269	GRE (Reference Group of Experts)	3055
270	Concord EDI group	3055
271	InterContainer InterFrigo	3055
272	Joint Automotive Industry agency	3055
273	CH, SCC (Swiss Chambers of Commerce)	3055
274	ITIGG (International Transport Implementation Guidelines Group)	3055
275	ES, Banco de España	3055
276	Assigned by Port Community	3055
277	BIGNet (Business Information Group Network)	3055
278	Eurogate	3055
279	NL, Graydon	3055
280	FR, Euler	3055
281	ICODIF/EAN Belgium-Luxembourg	3055
282	DE, Creditreform International e.V.	3055
283	DE, Hermes Kreditversicherungs AG	3055
284	TW, Taiwanese Bankers' Association	3055
285	ES, Asociación Española de Banca	3055
286	SE, TCO (Tjänstemännes Central Organisation)	3055
287	DE, FORTRAS (Forschungs- und Entwicklungsgesellschaft für Transportwesen GMBH)	3055
288	OSJD (Organizacija Sotrudnichestva Zeleznih Dorog)	3055
289	JP,JIPDEC/ECPC (Japan Information Processing Development Center / Electronic Commerce Promotion Center)	3055
290	JP, JAMA	3055
291	JP, JAPIA	3055
292	FI, TIEKE The Information Technology Development Centre of Finland	3055

COPYRIGHT VDA 2026

Applicable codes

Code	Name/description	Code list
293	DE, VDEW (Verband der Elektrizitatswirtschaft)	3055
294	AT, EAN Austria	3055
295	AU, Australian Therapeutic Goods Administration	3055
ADE	Account number	3055
ANK	Reference number assigned by third party	3055
O10	Party identifier assigned by ODETTE	3055
O91	Assigned by the provider of the empty packaging	3055
O92	Assigned by the receiver of the empty packaging	3055
O99	Packaging Manager Account Number	3055
PE	Plant number	3055
VA	VAT registration number	3055
ZZZ	Mutually defined	3055
1	CCC (Customs Co-operation Council)	3055
2	CEC (Commission of the European Communities)	3055
3	IATA (International Air Transport Association)	3055
4	ICC (International Chamber of Commerce)	3055
5	ISO (International Organization for Standardization)	3055
6	UN/ECE (United Nations - Economic Commission for Europe)	3055
7	CEFIC (Conseil Europeen des Federations de l'Industrie Chimique)	3055
8	EDIFICE	3055
9	GS1	3055
10	ODETTE	3055
11	Lloyd's register of shipping	3055
12	UIC (International union of railways)	3055
13	ICAO (International Civil Aviation Organization)	3055
14	ICS (International Chamber of Shipping)	3055
15	RINET (Reinsurance and Insurance Network)	3055
16	US, D&B (Dun & Bradstreet Corporation)	3055
17	S.W.I.F.T.	3055
18	Conventions on SAD and transit (EC and EFTA)	3055
19	FRRC (Federal Reserve Routing Code)	3055
20	BIC (Bureau International des Containeurs)	3055
21	Assigned by transport company	3055
22	US, ISA (Information Systems Agreement)	3055
23	FR, EDITRANSPORT	3055
24	AU, ROA (Railways of Australia)	3055
25	EDITEX (Europe)	3055
26	NL, Foundation Uniform Transport Code	3055
27	US, FDA (Food and Drug Administration)	3055
28	EDITEUR (European book sector electronic data interchange group)	3055
29	GB, FLEETNET	3055
30	GB, ABTA (Association of British Travel Agencies)	3055
31	FI, Finish State Railway	3055
32	PL, Polish State Railway	3055
33	BG, Bulgaria State Railway	3055
34	RO, Rumanian State Railway	3055
35	CZ, Tchechian State Railway	3055
36	HU, Hungarian State Railway	3055
37	GB, British Railways	3055
38	ES, Spanish National Railway	3055
39	SE, Swedish State Railway	3055
40	NO, Norwegian State Railway	3055
41	DE, German Railway	3055
42	AT, Austrian Federal Railways	3055
43	LU, Luxembourg National Railway Company	3055

COPYRIGHT VDA 2026

Applicable codes

Code	Name/description	Code list
44	IT, Italian State Railways	3055
45	NL, Netherlands Railways	3055
46	CH, Swiss Federal Railways	3055
47	DK, Danish State Railways	3055
48	FR, French National Railway Company	3055
49	BE, Belgian National Railway Company	3055
50	PT, Portuguese Railways	3055
51	SK, Slovakian State Railways	3055
52	IE, Irish Transport Company	3055
53	FIATA (International Federation of Freight Forwarders Associations)	3055
54	IMO (International Maritime Organisation)	3055
55	US, DOT (United States Department of Transportation)	3055
56	TW, Trade-van	3055
57	TW, Chinese Taipei Customs	3055
58	EUROFER	3055
59	DE, EDIBAU	3055
60	Assigned by national trade agency	3055
61	Association Europeenne des Constructeurs de Materiel Aerospatial (AECMA)	3055
62	US, DIstilled Spirits Council of the United States (DISCUS)	3055
63	North Atlantic Treaty Organization (NATO)	3055
64	FR, CLEEP	3055
65	GS1 France	3055
66	MY, Malaysian Customs and Excise	3055
67	MY, Malaysia Central Bank	3055
68	GS1 Italy	3055
69	US, National Alcohol Beverage Control Association (NABCA)	3055
70	MY, Dagang.Net	3055
71	US, FCC (Federal Communications Commission)	3055
72	US, MARAD (Maritime Administration)	3055
73	US, DSAA (Defense Security Assistance Agency)	3055
74	US, NRC (Nuclear Regulatory Commission)	3055
75	US, ODTC (Office of Defense Trade Controls)	3055
76	US, ATF (Bureau of Alcohol, Tobacco and Firearms)	3055
77	US, BXA (Bureau of Export Administration)	3055
78	US, FWS (Fish and Wildlife Service)	3055
79	US, OFAC (Office of Foreign Assets Control)	3055
80	BRMA/RAA - LIMNET - RINET Joint Venture	3055
81	RU, (SFT) Society for Financial Telecommunications	3055
82	NO, Enhetsregisteret ved Bronnoysundregisterne	3055
83	US, National Retail Federation	3055
84	DE, BRD (Gesetzgeber der Bundesrepublik Deutschland)	3055
85	North America, Telecommunications Industry Forum	3055
86	Assigned by party originating the message	3055
87	Assigned by carrier	3055
88	Assigned by owner of operation	3055
89	Assigned by distributor	3055
90	Assigned by manufacturer	3055
91	Assigned by seller or seller's agent	3055
92	Assigned by buyer or buyer's agent	3055
93	AT, Austrian Customs	3055
94	AT, Austrian PTT	3055
95	AU, Australian Customs Service	3055
96	CA, Revenue Canada, Customs and Excise	3055
97	CH, Administration federale des contributions	3055
98	CH, Direction generale des douanes	3055

COPYRIGHT VDA 2026

Applicable codes

Code	Name/description	Code list
99	CH, Division des importations et exportations, OFAEE	3055
100	CH, Entreprise des PTT	3055
101	CH, Carbura	3055
102	CH, Centrale suisse pour l'importation du charbon	3055
103	CH, Office fiduciaire des importateurs de denrees alimentaires	3055
104	CH, Association suisse code des articles	3055
105	DK, Ministry of taxation, Central Customs and Tax Administration	3055
106	FR, Direction generale des douanes et droits indirects	3055
107	FR, INSEE	3055
108	FR, Banque de France	3055
109	GB, H.M. Customs & Excise	3055
110	IE, Revenue Commissioners, Customs AEP project	3055
111	US, U.S. Customs Service	3055
112	US, U.S. Census Bureau	3055
113	GS1 US	3055
114	US, ABA (American Bankers Association)	3055
116	US, ANSI ASC X12	3055
117	AT, Geldausgabeautomaten-Service Gesellschaft m.b.H.	3055
118	SE, Svenska Bankfoereningen	3055
119	IT, Associazione Bancaria Italiana	3055
120	IT, Socieata' Interbancaria per l'Automazione	3055
121	CH, Telekurs AG	3055
122	CH, Swiss Securities Clearing Corporation	3055
123	NO, Norwegian Interbank Research Organization	3055
124	NO, Norwegian Bankers' Association	3055
125	FI, The Finnish Bankers' Association	3055
126	US, NCCMA (Account Analysis Codes)	3055
127	DE, ARE (AbRechnungs Einheit)	3055
128	BE, Belgian Bankers' Association	3055
129	BE, Belgian Ministry of Finance	3055
130	DK, Danish Bankers Association	3055
131	DE, German Bankers Association	3055
132	GB, BACS Limited	3055
133	GB, Association for Payment Clearing Services	3055
134	GB, APACS (Association of payment clearing services)	3055
135	GB, The Clearing House	3055
136	GS1 UK	3055
137	AT, Verband oesterreichischer Banken und Bankiers	3055
138	FR, CFONB (Comite francais d'organ. et de normalisation bancaires)	3055
139	Universal Postal Union (UPU)	3055
140	CEC (Commission of the European Communities), DG/XXI-01	3055
141	CEC (Commission of the European Communities), DG/XXI-B-1	3055
142	CEC (Commission of the European Communities), DG/XXXIV	3055
143	NZ, New Zealand Customs	3055
144	NL, Netherlands Customs	3055
145	SE, Swedish Customs	3055
146	DE, German Customs	3055
147	BE, Belgian Customs	3055
148	ES, Spanish Customs	3055
149	IL, Israel Customs	3055
150	HK, Hong Kong Customs	3055
151	JP, Japan Customs	3055
152	SA, Saudi Arabia Customs	3055
153	IT, Italian Customs	3055
154	GR, Greek Customs	3055

COPYRIGHT VDA 2026

Applicable codes

Code	Name/description	Code list
155	PT, Portuguese Customs	3055
156	LU, Luxembourg Customs	3055
157	NO, Norwegian Customs	3055
158	FI, Finnish Customs	3055
159	IS, Iceland Customs	3055
160	LI, Liechtenstein authority	3055
161	UNCTAD (United Nations - Conference on Trade And Development)	3055
162	CEC (Commission of the European Communities), DG/XIII-D-5	3055
163	US, FMC (Federal Maritime Commission)	3055
164	US, DEA (Drug Enforcement Agency)	3055
165	US, DCI (Distribution Codes, INC.)	3055
166	US, National Motor Freight Classification Association	3055
167	US, AIAG (Automotive Industry Action Group)	3055
168	US, FIPS (Federal Information Publishing Standard)	3055
169	CA, SCC (Standards Council of Canada)	3055
170	CA, CPA (Canadian Payment Association)	3055
171	NL, Interpay Girale Services	3055
172	NL, Interpay Debit Card Services	3055
173	NO, NORPRO	3055
174	DE, DIN (Deutsches Institut fuer Normung)	3055
175	FCI (Factors Chain International)	3055
176	BR, Banco Central do Brazil	3055
177	AU, LIFA (Life Insurance Federation of Australia)	3055
178	AU, SAA (Standards Association of Australia)	3055
179	US, Air transport association of America	3055
180	DE, BIA (Berufsgenossenschaftliches Institut fuer Arbeitssicherheit)	3055
181	Edibuild	3055
182	US, Standard Carrier Alpha Code (Motor)	3055
183	US, American Petroleum Institute	3055
184	AU, ACOS (Australian Chamber of Shipping)	3055
185	DE, BDI (Bundesverband der Deutschen Industrie e.V.)	3055
186	US, GSA (General Services Administration)	3055
187	US, DLMSO (Defense Logistics Management Standards Office)	3055
188	US, NIST (National Institute of Standards and Technology)	3055
189	US, DoD (Department of Defense)	3055
190	US, VA (Department of Veterans Affairs)	3055
191	IAPSO (United Nations Inter-Agency Procurement Services Office)	3055
192	Shipper's association	3055
193	EU, European Telecommunications Informatics Services (ETIS)	3055
194	AU, AQIS (Australian Quarantine and Inspection Service)	3055
195	CO, DIAN (Direccion de Impuestos y Aduanas Nacionales)	3055
196	US, COPAS (Council of Petroleum Accounting Society)	3055
197	US, DISA (Data Interchange Standards Association)	3055
198	CO, Superintendencia Bancaria De Colombia	3055
199	FR, Direction de la Comptabilite Publique	3055
200	GS1 Netherlands	3055
201	US, WSSA(Wine and Spirits Shippers Association)	3055
202	PT, Banco de Portugal	3055
203	FR, GALIA (Groupement pour l'Amelioration des Liaisons dans l'Industrie Automobile)	3055
204	DE, VDA (Verband der Automobilindustrie E.V.)	3055
205	IT, ODETTE Italy	3055
206	NL, ODETTE Netherlands	3055
207	ES, ODETTE Spain	3055
208	SE, ODETTE Sweden	3055
209	GB, ODETTE United Kingdom	3055

COPYRIGHT VDA 2026

Applicable codes

Code	Name/description	Code list
210	EU, EDI for financial, informational, cost, accounting, auditing and social areas (EDIFICAS) - Europe	3055
211	FR, EDI for financial, informational, cost, accounting, auditing and social areas (EDIFICAS) - France	3055
212	DE, Deutsch Telekom AG	3055
213	JP, NACCS Center (Nippon Automated Cargo Clearance System Operations Organization)	3055
214	US, AISI (American Iron and Steel Institute)	3055
215	AU, APCA (Australian Payments Clearing Association)	3055
216	US, Department of Labor	3055
217	US, N.A.I.C. (National Association of Insurance Commissioners)	3055
218	GB, The Association of British Insurers	3055
219	FR, d'ArvA	3055
220	FI, Finnish tax board	3055
221	FR, CNAMTS (Caisse Nationale de l'Assurance Maladie des Travailleurs Salaries)	3055
222	DK, Danish National Board of Health	3055
223	DK, Danish Ministry of Home Affairs	3055
224	US, Aluminum Association	3055
225	US, CIDX (Chemical Industry Data Exchange)	3055
226	US, Carbide Manufacturers	3055
227	US, NWDA (National Wholesale Druggist Association)	3055
228	US, EIA (Electronic Industry Association)	3055
229	US, American Paper Institute	3055
230	US, VICS (Voluntary Inter-Industry Commerce Standards)	3055
231	Copper and Brass Fabricators Council	3055
232	GB, Inland Revenue	3055
233	US, OMB (Office of Management and Budget)	3055
234	DE, Siemens AG	3055
235	AU, Tradegate (Electronic Commerce Australia)	3055
236	US, United States Postal Service (USPS)	3055
237	US, United States health industry	3055
238	US, TDCC (Transportation Data Coordinating Committee)	3055
239	US, HL7 (Health Level 7)	3055
240	US, CHIPS (Clearing House Interbank Payment Systems)	3055
241	PT, SIBS (Sociedade Interbancaria de Servicos)	3055
244	US, Department of Health and Human Services	3055
245	GS1 Denmark	3055
246	GS1 Germany	3055
247	US, HBICC (Health Industry Business Communication Council)	3055
248	US, ASTM (American Society of Testing and Materials)	3055
249	IP (Institute of Petroleum)	3055
250	US, UOP (Universal Oil Products)	3055
251	AU, HIC (Health Insurance Commission)	3055
252	AU, AIHW (Australian Institute of Health and Welfare)	3055
253	AU, NCCH (National Centre for Classification in Health)	3055
254	AU, DOH (Australian Department of Health)	3055
255	AU, ADA (Australian Dental Association)	3055
256	US, AAR (Association of American Railroads)	3055
257	ECCMA (Electronic Commerce Code Management Association)	3055
258	JP, Japanese Ministry of Transport	3055
259	JP, Japanese Maritime Safety Agency	3055
260	ebIX (European forum for energy Business Information eXchange)	3055
261	EEG7, European Expert Group 7 (Insurance)	3055
262	DE, GDV (Gesamtverband der Deutschen Versicherungswirtschaft e.V.)	3055
263	CA, CSIO (Centre for Study of Insurance Operations)	3055

COPYRIGHT VDA 2026

Applicable codes

Code	Name/description	Code list
264	FR, AGF (Assurances Generales de France)	3055
265	SE, Central bank	3055
266	US, DoA (Department of Agriculture)	3055
267	RU, Central Bank of Russia	3055
268	FR, DGI (Direction Generale des Impots)	3055
269	GRE (Reference Group of Experts)	3055
270	Concord EDI group	3055
271	InterContainer InterFrigo	3055
272	Joint Automotive Industry agency	3055
273	CH, SCC (Swiss Chambers of Commerce)	3055
274	ITIGG (International Transport Implementation Guidelines Group)	3055
275	ES, Banco de España	3055
276	Assigned by Port Community	3055
277	BIGNet (Business Information Group Network)	3055
278	Eurogate	3055
279	NL, Graydon	3055
280	FR, Euler	3055
281	GS1 Belgium and Luxembourg	3055
282	DE, Creditreform International e.V.	3055
283	DE, Hermes Kreditversicherungs AG	3055
284	TW, Taiwanese Bankers' Association	3055
285	ES, Asociación Española de Banca	3055
286	SE, TCO (Tjänstemännes Central Organisation)	3055
287	DE, FORTRAS (Forschungs- und Entwicklungsgesellschaft für Transportwesen GMBH)	3055
288	OSJD (Organizacija Sotrudnichestva Zeleznih Dorog)	3055
289	JP,JIPDEC/ECPC (Japan Information Processing Development Center / Electronic Commerce Promotion Center)	3055
290	JP, JAMA	3055
291	JP, JAPIA	3055
292	FI, TIEKE The Information Technology Development Centre of Finland	3055
293	DE, BDEW (Bundesverband der Energie- und Wasserwirtschaft e.V.)	3055
294	GS1 Austria	3055
295	AU, Australian Therapeutic Goods Administration	3055
296	ITU (International Telecommunication Union)	3055
297	IT, Ufficio IVA	3055
298	GS1 Spain	3055
299	BE, Seagha	3055
300	SE, Swedish International Freight Association	3055
301	DE, BauDatenbank GmbH	3055
302	DE, Bundesverband des Deutschen Textileinzelhandels e.V.	3055
303	GB, Trade Service Information Ltd (TSI)	3055
304	DE, Bundesverband Deutscher Heimwerker-, Bau- und Gartenfachmaerkte e.V.	3055
305	ETSO (European Transmission System Operator)	3055
306	SMDG (Ship-planning Message Design Group)	3055
307	JP, Ministry of Justice	3055
308	DE, FORTRAS (Forschungs- und Entwicklungsgesellschaft furTransportwesen mbH)	3055
309	JP, JASTPRO (Japan Association for Simplification of International Trade Procedures)	3055
310	DE, SAP AG (Systeme, Anwendungen und Produkte)	3055
311	JP, TDB (Teikoku Databank, Ltd.)	3055
312	FR, AGRO EDI EUROPE	3055
313	FR, Groupement National Interprofessionnel des Semences et Plants	3055
314	OAGi (Open Applications Group, Incorporated)	3055
315	US, STAR (Standards for Technology in Automotive Retail)	3055
316	GS1 Finland	3055
317	GS1 Brazil	3055

COPYRIGHT VDA 2026

Applicable codes

Code	Name/description	Code list
318	IETF (Internet Engineering Task Force)	3055
319	FR, GTF	3055
320	DK, Danish National IT and Telcom Agency (ITA)	3055
321	EASEE-Gas (European Association for the Streamlining of Energy Exchange for gas)	3055
322	IS, ICEPRO	3055
323	PROTECT	3055
324	GS1 Ireland	3055
325	GS1 Russia	3055
326	GS1 Poland	3055
327	GS1 Estonia	3055
328	Assigned by ultimate recipient of the message	3055
329	Assigned by loading dock operator	3055
330	Nordic Ediel Group	3055
331	US, Agricultural Marketing Service (AMS)	3055
332	DE, DVGW Service & Consult GmbH	3055
333	US, Animal and Plant Health Inspection Service (APHIS)	3055
334	US, Bureau of Labor Statistics (BLS)	3055
335	US, Bureau of Transportation Statistics (BTS)	3055
336	US, Customs and Border Protection (CBP)	3055
337	US, Center for Disease Control (CDC)	3055
338	US, Consumer Product Safety Commission (CPSC)	3055
339	US, Directorate of Defense Trade Controls (DDTC)	3055
340	US, Environmental Protection Agency (EPA)	3055
341	US, Federal Aviation Administration (FAA)	3055
342	US, Foreign Agriculture Service (FAS)	3055
343	US, Federal Motor Carrier Safety Administration (FMCSA)	3055
344	US, Food Safety Inspection Service (FSIS)	3055
345	US, Foreign Trade Zones Board (FTZB)	3055
346	US, The Grain Inspection, Packers and Stockyards Administration (GIPSA)	3055
347	US, Import Administration (IA)	3055
348	US, Internal Revenue Service (IRS)	3055
349	US, International Trade Commission (ITC)	3055
350	US, National Highway Traffic Safety Administration (NHTSA)	3055
351	US, National Marine Fisheries Service (NMFS)	3055
352	US, Office of Fossil Energy (OFE)	3055
353	US, Office of Foreign Missions (OFM)	3055
354	US, Bureau of Oceans and International Environmental and Scientific Affairs (OES)	3055
355	US, Office of Naval Intelligence (ONI)	3055
356	US, Pipeline and Hazardous Materials Safety Administration (PHMSA)	3055
357	US, Alcohol and Tobacco Tax and Trade Bureau (TTB)	3055
358	US, Army Corp of Engineers (USACE)	3055
359	US, Agency for International Development (USAID)	3055
360	US, Coast Guard (USCG)	3055
361	US, Office of the United States Trade Representative (USTR)	3055
362	International Commission for the Conservation of Atlantic Tunas (ICCAT)	3055
363	Inter-American Tropical Tuna Commission (IATTC)	3055
364	Commission for the Conservation of Southern Bluefin Tuna (CCSBT)	3055
365	Indian Ocean Tuna Commission (IOTC)	3055
366	International Botanical Congress	3055
367	International Commission on Zoological Nomenclature	3055
368	International Society for Horticulture Science	3055
369	Chemical Abstract Service (CAS)	3055
370	Social Security Administration (SSA)	3055
371	INMARSAT	3055
372	Agent of ship at the intended port of arrival	3055

COPYRIGHT VDA 2026

Applicable codes

Code	Name/description	Code list
373	US Air Force	3055
374	US, Bureau of Explosives	3055
375	Basel Convention Secretariat	3055
376	PANTONE	3055
377	IS, National Registry of Iceland	3055
378	IS, Internal Revenue Directorate of Iceland	3055
379	IANA (Internet Assigned Numbers Authority)	3055
380	Korea Customs Service	3055
381	Israel Tax Authority	3055
382	Israeli Ministry of Interior	3055
383	FR, LUMD (Logistique Urbaine Mutualisée Durable)	3055
384	DE, BiPRO (Brancheninitiative Prozessoptimierung)	3055
385	JO, Jordan Ministry of Agriculture	3055
386	JO, Jordan Customs	3055
387	JO, Jordan Food & Drug Administration	3055
388	JO, Jordan Institution for Standards and Metrology	3055
389	JO, Jordan Telecommunication Regulatory Commission	3055
390	JO, Jordan Nuclear Regulatory Commission	3055
391	JO, Jordan Ministry of Environment	3055
392	Hazardous waste collector	3055
393	Hazardous waste generator	3055
394	Marketing agent	3055
395	BE, TELEBIB Centre	3055
396	BE, BNB	3055
397	BE, FSMA	3055
398	FR, PHAST	3055
399	EXIS (Exis Technologies Ltd.)	3055
400	FAO (Food and Agriculture Organisation)	3055
401	CH, Spedlogswiss	3055
402	JP, National Tax Agency	3055
403	Comite Européen de Normalisation	3055
404	Assigned by logistics service provider	3055
405	Assigned by transport ministry	3055
406	AR, Customs Administration of Argentina	3055
407	BO, Customs Administration of Bolivia	3055
408	BR, Customs Administration of Brazil	3055
409	PY, Customs Administration of Paraguay	3055
410	UY, Customs Administration of Uruguay	3055
411	VE, Customs Administration of Venezuela	3055
412	IN, Customs Administration of India	3055
413	JP, JEC (UN/CEFACT Japan Committee)	3055
414	UAE, NAIC (National Advance Information Center)	3055
ZZZ	Mutually defined	3055

3139 Contact function code

Code	Name/description	Code list
EX	Expeditor	3139
IC	Information contact	3139
SC	Schedule contact	3139

3155 Communication means type code

Code	Name/description	Code list
EM	Electronic mail	3155
FX	Telefax	3155
TE	Telephone	3155

COPYRIGHT VDA 2026

Applicable codes

3207 Country identifier

Code	Name/description	Code list
AD	ANDORRA	3207
AE	UNITED ARAB EMIRATES	3207
AF	AFGHANISTAN	3207
AG	ANTIGUA AND BARBUDA	3207
AI	ANGUILLA	3207
AL	ALBANIA	3207
AM	ARMENIA	3207
AN	NETHERLANDS ANTILLES	3207
AO	ANGOLA	3207
AQ	ANTARCTICA	3207
AR	ARGENTINA	3207
AS	AMERICAN SAMOA	3207
AT	AUSTRIA	3207
AU	AUSTRALIA	3207
AW	ARUBA	3207
AX	ÅLAND ISLANDS	3207
AZ	AZERBAIJAN	3207
BA	BOSNIA AND HERZEGOVINA	3207
BB	BARBADOS	3207
BD	BANGLADESH	3207
BE	BELGIUM	3207
BF	BURKINA FASO	3207
BG	BULGARIA	3207
BH	BAHRAIN	3207
BI	BURUNDI	3207
BJ	BENIN	3207
BL	SAINT BARTHÉLEMY	3207
BM	BERMUDA	3207
BN	BRUNEI DARUSSALAM	3207
BO	BOLIVIA (PLURINATIONAL STATE OF)	3207
BQ	BONAIRE, SINT EUSTATIUS AND SABA	3207
BR	BRAZIL	3207
BS	BAHAMAS	3207
BT	BHUTAN	3207
BV	BOUVET ISLAND	3207
BW	BOTSWANA	3207
BY	BELARUS	3207
BZ	BELIZE	3207
CA	CANADA	3207
CC	COCOS (KEELING) ISLANDS	3207
CD	CONGO, DEMOCRATIC REPUBLIC OF	3207
CF	CENTRAL AFRICAN REPUBLIC	3207
CG	CONGO	3207
CH	SWITZERLAND	3207
CI	COTE D'IVOIRE	3207
CK	COOK ISLANDS	3207
CL	CHILE	3207
CM	CAMEROON	3207
CN	CHINA	3207
CO	COLOMBIA	3207
CR	COSTA RICA	3207
CS	SERBIA AND MONTENEGRO	3207
CU	CUBA	3207

COPYRIGHT VDA 2026

Applicable codes

Code	Name/description	Code list
CV	CAPE VERDE	3207
CW	CURAÇAO	3207
CX	CHRISTMAS ISLAND	3207
CY	CYPRUS	3207
CZ	CZECHIA	3207
DE	GERMANY	3207
DJ	DJIBOUTI	3207
DK	DENMARK	3207
DM	DOMINICA	3207
DO	DOMINICAN REPUBLIC	3207
DZ	ALGERIA	3207
EC	ECUADOR	3207
EE	ESTONIA	3207
EG	EGYPT	3207
EH	WESTERN SAHARA	3207
ER	ERITREA	3207
ES	SPAIN	3207
ET	ETHIOPIA	3207
FI	FINLAND	3207
FJ	FIJI	3207
FK	FALKLAND ISLANDS (MALVINAS)	3207
FM	MICRONESIA (FEDERATED STATES OF)	3207
FO	FAROE ISLANDS	3207
FR	FRANCE	3207
GA	GABON	3207
GB	UNITED KINGDOM OF GREAT BRITAIN AND NORTHERN IRELAND	3207
GD	GRENADA	3207
GE	GEORGIA	3207
GF	FRENCH GUIANA	3207
GG	GUERNSEY	3207
GH	GHANA	3207
GI	GIBRALTAR	3207
GL	GREENLAND	3207
GM	GAMBIA	3207
GN	GUINEA	3207
GP	GUADELOUPE	3207
GQ	EQUATORIAL GUINEA	3207
GR	GREECE	3207
GS	SOUTH GEORGIA AND THE SOUTH SANDWICH ISLANDS	3207
GT	GUATEMALA	3207
GU	GUAM	3207
GW	GUINEA-BISSAU	3207
GY	GUYANA	3207
HK	HONG KONG	3207
HM	HEARD ISLAND AND MCDONALD ISLANDS	3207
HN	HONDURAS	3207
HR	CROATIA	3207
HT	HAITI	3207
HU	HUNGARY	3207
ID	INDONESIA	3207
IE	IRELAND	3207
IL	ISRAEL	3207
IM	ISLE OF MAN	3207
IN	INDIA	3207
IO	BRITISH INDIAN OCEAN TERRITORY	3207

COPYRIGHT VDA 2026

Applicable codes

Code	Name/description	Code list
IQ	IRAQ	3207
IR	IRAN (ISLAMIC REPUBLIC OF)	3207
IS	ICELAND	3207
IT	ITALY	3207
JE	JERSEY	3207
JM	JAMAICA	3207
JO	JORDAN	3207
JP	JAPAN	3207
KE	KENYA	3207
KG	KYRGYZSTAN	3207
KH	CAMBODIA	3207
KI	KIRIBATI	3207
KM	COMOROS	3207
KN	SAINT KITTS AND NEVIS	3207
KP	KOREA (DEMOCRATIC PEOPLE'S REPUBLIC OF)	3207
KR	KOREA, REPUBLIC OF	3207
KW	KUWAIT	3207
KY	CAYMAN ISLANDS	3207
KZ	KAZAKHSTAN	3207
LA	LAO PEOPLE'S DEMOCRATIC REPUBLIC	3207
LB	LEBANON	3207
LC	SAINT LUCIA	3207
LI	LIECHTENSTEIN	3207
LK	SRI LANKA	3207
LR	LIBERIA	3207
LS	LESOTHO	3207
LT	LITHUANIA	3207
LU	LUXEMBOURG	3207
LV	LATVIA	3207
LY	LIBYA	3207
MA	MOROCCO	3207
MC	MONACO	3207
MD	MOLDOVA, REPUBLIC OF	3207
ME	MONTENEGRO	3207
MF	SAINT MARTIN (FRENCH PART)	3207
MG	MADAGASCAR	3207
MH	MARSHALL ISLANDS	3207
MK	MACEDONIA, THE FORMER YUGOSLAV REPUBLIC OF	3207
ML	MALI	3207
MM	MYANMAR	3207
MN	MONGOLIA	3207
MO	MACAO	3207
MP	NORTHERN MARIANA ISLANDS	3207
MQ	MARTINIQUE	3207
MR	MAURITANIA	3207
MS	MONTSERRAT	3207
MT	MALTA	3207
MU	MAURITIUS	3207
MV	MALDIVES	3207
MW	MALAWI	3207
MX	MEXICO	3207
MY	MALAYSIA	3207
MZ	MOZAMBIQUE	3207
NA	NAMIBIA	3207
NC	NEW CALEDONIA	3207

COPYRIGHT VDA 2026

Applicable codes

Code	Name/description	Code list
NE	NIGER	3207
NF	NORFOLK ISLAND	3207
NG	NIGERIA	3207
NI	NICARAGUA	3207
NL	NETHERLANDS	3207
NO	NORWAY	3207
NP	NEPAL	3207
NR	NAURU	3207
NU	NIUE	3207
NZ	NEW ZEALAND	3207
OM	OMAN	3207
PA	PANAMA	3207
PE	PERU	3207
PF	FRENCH POLYNESIA	3207
PG	PAPUA NEW GUINEA	3207
PH	PHILIPPINES	3207
PK	PAKISTAN	3207
PL	POLAND	3207
PM	SAINT PIERRE AND MIQUELON	3207
PN	PITCAIRN	3207
PR	PUERTO RICO	3207
PS	PALESTINE, STATE OF	3207
PT	PORTUGAL	3207
PW	PALAU	3207
PY	PARAGUAY	3207
QA	QATAR	3207
RE	REUNION	3207
RO	ROMANIA	3207
RS	SERBIA	3207
RU	RUSSIAN FEDERATION	3207
RW	RWANDA	3207
SA	SAUDI ARABIA	3207
SB	SOLOMON ISLANDS	3207
SC	SEYCHELLES	3207
SD	SUDAN	3207
SE	SWEDEN	3207
SG	SINGAPORE	3207
SH	SAINT HELENA, ASCENSION AND TRISTAN DA CUNHA	3207
SI	SLOVENIA	3207
SJ	SVALBARD AND JAN MAYEN	3207
SK	SLOVAKIA	3207
SL	SIERRA LEONE	3207
SM	SAN MARINO	3207
SN	SENEGAL	3207
SO	SOMALIA	3207
SR	SURINAME	3207
SS	SOUTH SUDAN	3207
ST	SAO TOME AND PRINCIPE	3207
SV	EL SALVADOR	3207
SX	SINT MAARTEN (DUTCH PART)	3207
SY	SYRIAN ARAB REPUBLIC	3207
SZ	SWAZILAND	3207
TC	TURKS AND CAICOS ISLANDS	3207
TD	CHAD	3207
TF	FRENCH SOUTHERN TERRITORIES	3207

COPYRIGHT VDA 2026

Applicable codes

Code	Name/description	Code list
TG	TOGO	3207
TH	THAILAND	3207
TJ	TAJIKISTAN	3207
TK	TOKELAU	3207
TL	TIMOR-LESTE	3207
TM	TURKMENISTAN	3207
TN	TUNISIA	3207
TO	TONGA	3207
TR	TURKEY	3207
TT	TRINIDAD AND TOBAGO	3207
TV	TUVALU	3207
TW	TAIWAN, PROVINCE OF CHINA	3207
TZ	TANZANIA, UNITED REPUBLIC OF	3207
UA	UKRAINE	3207
UG	UGANDA	3207
UM	UNITED STATES MINOR OUTLYING ISLANDS	3207
US	UNITED STATES OF AMERICA	3207
UY	URUGUAY	3207
UZ	UZBEKISTAN	3207
VA	HOLY SEE	3207
VC	SAINT VINCENT AND THE GRENADINES	3207
VE	VENEZUELA (BOLIVARIAN REPUBLIC OF)	3207
VG	VIRGIN ISLANDS, BRITISH	3207
VI	VIRGIN ISLANDS, U.S.	3207
VN	VIET NAM	3207
VU	VANUATU	3207
WF	WALLIS AND FUTUNA	3207
WS	SAMOA	3207
YE	YEMEN	3207
YT	MAYOTTE	3207
YU	YUGOSLAVIA	3207
ZA	SOUTH AFRICA	3207
ZM	ZAMBIA	3207
ZW	ZIMBABWE	3207

3227 Location function code qualifier

Code	Name/description	Code list
1	Place of terms of delivery	3227
5	Place of departure	3227
7	Place of delivery	3227
9	Place of loading	3227
11	Place of discharge	3227
13	Place of transhipment	3227
60	Place of arrival	3227

3239 Country of origin identifier

Code	Name/description	Code list
AD	ANDORRA	3239
AE	UNITED ARAB EMIRATES	3239
AF	AFGHANISTAN	3239
AG	ANTIGUA AND BARBUDA	3239
AI	ANGUILLA	3239
AL	ALBANIA	3239
AM	ARMENIA	3239
AN	NETHERLANDS ANTILLES	3239

COPYRIGHT VDA 2026

Applicable codes

Code	Name/description	Code list
AO	ANGOLA	3239
AQ	ANTARCTICA	3239
AR	ARGENTINA	3239
AS	AMERICAN SAMOA	3239
AT	AUSTRIA	3239
AU	AUSTRALIA	3239
AW	ARUBA	3239
AX	ÅLAND ISLANDS	3239
AZ	AZERBAIJAN	3239
BA	BOSNIA AND HERZEGOVINA	3239
BB	BARBADOS	3239
BD	BANGLADESH	3239
BE	BELGIUM	3239
BF	BURKINA FASO	3239
BG	BULGARIA	3239
BH	BAHRAIN	3239
BI	BURUNDI	3239
BJ	BENIN	3239
BL	SAINT BARTHÉLEMY	3239
BM	BERMUDA	3239
BN	BRUNEI DARUSSALAM	3239
BO	BOLIVIA (PLURINATIONAL STATE OF)	3239
BQ	BONAIRE, SINT EUSTATIUS AND SABA	3239
BR	BRAZIL	3239
BS	BAHAMAS	3239
BT	BHUTAN	3239
BV	BOUVET ISLAND	3239
BW	BOTSWANA	3239
BY	BELARUS	3239
BZ	BELIZE	3239
CA	CANADA	3239
CC	COCOS (KEELING) ISLANDS	3239
CD	CONGO, DEMOCRATIC REPUBLIC OF THE	3239
CF	CENTRAL AFRICAN REPUBLIC	3239
CG	CONGO	3239
CH	SWITZERLAND	3239
CI	COTE D'IVOIRE	3239
CK	COOK ISLANDS	3239
CL	CHILE	3239
CM	CAMEROON	3239
CN	CHINA	3239
CO	COLOMBIA	3239
CR	COSTA RICA	3239
CS	SERBIA AND MONTENEGRO	3239
CU	CUBA	3239
CV	CAPE VERDE	3239
CW	CURAÇAO	3239
CX	CHRISTMAS ISLAND	3239
CY	CYPRUS	3239
CZ	CZECHIA	3239
DE	GERMANY	3239
DJ	DJIBOUTI	3239
DK	DENMARK	3239
DM	DOMINICA	3239
DO	DOMINICAN REPUBLIC	3239

COPYRIGHT VDA 2026

Applicable codes

Code	Name/description	Code list
DZ	ALGERIA	3239
EC	ECUADOR	3239
EE	ESTONIA	3239
EG	EGYPT	3239
EH	WESTERN SAHARA	3239
ER	ERITREA	3239
ES	SPAIN	3239
ET	ETHIOPIA	3239
FI	FINLAND	3239
FJ	FIJI	3239
FK	FALKLAND ISLANDS (MALVINAS)	3239
FM	MICRONESIA (FEDERATED STATES OF)	3239
FO	FAROE ISLANDS	3239
FR	FRANCE	3239
GA	GABON	3239
GB	UNITED KINGDOM OF GREAT BRITAIN AND NORTHERN IRELAND	3239
GD	GRENADA	3239
GE	GEORGIA	3239
GF	FRENCH GUIANA	3239
GG	GUERNSEY	3239
GH	GHANA	3239
GI	GIBRALTAR	3239
GL	GREENLAND	3239
GM	GAMBIA	3239
GN	GUINEA	3239
GP	GUADELOUPE	3239
GQ	EQUATORIAL GUINEA	3239
GR	GREECE	3239
GS	SOUTH GEORGIA AND THE SOUTH SANDWICH ISLANDS	3239
GT	GUATEMALA	3239
GU	GUAM	3239
GW	GUINEA-BISSAU	3239
GY	GUYANA	3239
HK	HONG KONG	3239
HM	HEARD ISLAND AND MCDONALD ISLANDS	3239
HN	HONDURAS	3239
HR	CROATIA	3239
HT	HAITI	3239
HU	HUNGARY	3239
ID	INDONESIA	3239
IE	IRELAND	3239
IL	ISRAEL	3239
IM	ISLE OF MAN	3239
IN	INDIA	3239
IO	BRITISH INDIAN OCEAN TERRITORY	3239
IQ	IRAQ	3239
IR	IRAN (ISLAMIC REPUBLIC OF)	3239
IS	ICELAND	3239
IT	ITALY	3239
JE	JERSEY	3239
JM	JAMAICA	3239
JO	JORDAN	3239
JP	JAPAN	3239
KE	KENYA	3239
KG	KYRGYZSTAN	3239

COPYRIGHT VDA 2026

Applicable codes

Code	Name/description	Code list
KH	CAMBODIA	3239
KI	KIRIBATI	3239
KM	COMOROS	3239
KN	SAINT KITTS AND NEVIS	3239
KP	KOREA (DEMOCRATIC PEOPLE'S REPUBLIC OF)	3239
KR	KOREA, REPUBLIC OF	3239
KW	KUWAIT	3239
KY	CAYMAN ISLANDS	3239
KZ	KAZAKHSTAN	3239
LA	LAO PEOPLE'S DEMOCRATIC REPUBLIC	3239
LB	LEBANON	3239
LC	SAINT LUCIA	3239
LI	LIECHTENSTEIN	3239
LK	SRI LANKA	3239
LR	LIBERIA	3239
LS	LESOTHO	3239
LT	LITHUANIA	3239
LU	LUXEMBOURG	3239
LV	LATVIA	3239
LY	LIBYA	3239
MA	MOROCCO	3239
MC	MONACO	3239
MD	MOLDOVA, REPUBLIC OF	3239
ME	MONTENEGRO	3239
MF	SAINT MARTIN (FRENCH PART)	3239
MG	MADAGASCAR	3239
MH	MARSHALL ISLANDS	3239
MK	MACEDONIA, THE FORMER YUGOSLAV REPUBLIC OF	3239
ML	MALI	3239
MM	MYANMAR	3239
MN	MONGOLIA	3239
MO	MACAO	3239
MP	NORTHERN MARIANA ISLANDS	3239
MQ	MARTINIQUE	3239
MR	MAURITANIA	3239
MS	MONTSERRAT	3239
MT	MALTA	3239
MU	MAURITIUS	3239
MV	MALDIVES	3239
MW	MALAWI	3239
MX	MEXICO	3239
MY	MALAYSIA	3239
MZ	MOZAMBIQUE	3239
NA	NAMIBIA	3239
NC	NEW CALEDONIA	3239
NE	NIGER	3239
NF	NORFOLK ISLAND	3239
NG	NIGERIA	3239
NI	NICARAGUA	3239
NL	NETHERLANDS	3239
NO	NORWAY	3239
NP	NEPAL	3239
NR	NAURU	3239
NU	NIUE	3239
NZ	NEW ZEALAND	3239

COPYRIGHT VDA 2026

Applicable codes

Code	Name/description	Code list
OM	OMAN	3239
PA	PANAMA	3239
PE	PERU	3239
PF	FRENCH POLYNESIA	3239
PG	PAPUA NEW GUINEA	3239
PH	PHILIPPINES	3239
PK	PAKISTAN	3239
PL	POLAND	3239
PM	SAINT PIERRE AND MIQUELON	3239
PN	PITCAIRN	3239
PR	PUERTO RICO	3239
PS	PALESTINE, STATE OF	3239
PT	PORTUGAL	3239
PW	PALAU	3239
PY	PARAGUAY	3239
QA	QATAR	3239
RE	REUNION	3239
RO	ROMANIA	3239
RS	SERBIA	3239
RU	RUSSIAN FEDERATION	3239
RW	RWANDA	3239
SA	SAUDI ARABIA	3239
SB	SOLOMON ISLANDS	3239
SC	SEYCHELLES	3239
SD	SUDAN	3239
SE	SWEDEN	3239
SG	SINGAPORE	3239
SH	SAINT HELENA, ASCENSION AND TRISTAN DA CUNHA	3239
SI	SLOVENIA	3239
SJ	SVALBARD AND JAN MAYEN	3239
SK	SLOVAKIA	3239
SL	SIERRA LEONE	3239
SM	SAN MARINO	3239
SN	SENEGAL	3239
SO	SOMALIA	3239
SR	SURINAME	3239
SS	SOUTH SUDAN	3239
ST	SAO TOME AND PRINCIPE	3239
SV	EL SALVADOR	3239
SX	SINT MAARTEN (DUTCH PART)	3239
SY	SYRIAN ARAB REPUBLIC	3239
SZ	SWAZILAND	3239
TC	TURKS AND CAICOS ISLANDS	3239
TD	CHAD	3239
TF	FRENCH SOUTHERN TERRITORIES	3239
TG	TOGO	3239
TH	THAILAND	3239
TJ	TAJIKISTAN	3239
TK	TOKELAU	3239
TL	TIMOR-LESTE	3239
TM	TURKMENISTAN	3239
TN	TUNISIA	3239
TO	TONGA	3239
TR	TURKEY	3239
TT	TRINIDAD AND TOBAGO	3239

COPYRIGHT VDA 2026

Applicable codes

Code	Name/description	Code list
TV	TUVALU	3239
TW	TAIWAN, PROVINCE OF CHINA	3239
TZ	TANZANIA, UNITED REPUBLIC OF	3239
UA	UKRAINE	3239
UG	UGANDA	3239
UM	UNITED STATES MINOR OUTLYING ISLANDS	3239
US	UNITED STATES OF AMERICA	3239
UY	URUGUAY	3239
UZ	UZBEKISTAN	3239
VA	HOLY SEE	3239
VC	SAINT VINCENT AND THE GRENADINES	3239
VE	VENEZUELA (BOLIVARIAN REPUBLIC OF)	3239
VG	VIRGIN ISLANDS, BRITISH	3239
VI	VIRGIN ISLANDS, U.S.	3239
VN	VIET NAM	3239
VU	VANUATU	3239
WF	WALLIS AND FUTUNA	3239
WS	SAMOA	3239
YE	YEMEN	3239
YT	MAYOTTE	3239
YU	YUGOSLAVIA	3239
ZA	SOUTH AFRICA	3239
ZM	ZAMBIA	3239
ZW	ZIMBABWE	3239

3453 Language name code

Code	Name/description	Code list
AA	Afar	3453
aa	Afar	3453
AB	Abkhazian	3453
ab	Abkhazian	3453
AE	Avestan	3453
ae	Avestan	3453
AF	Afrikaans	3453
af	Afrikaans	3453
AK	Akan	3453
ak	Akan	3453
AM	Amharic	3453
am	Amharic	3453
AN	Aragonese	3453
an	Aragonese	3453
AR	Arabic	3453
ar	Arabic	3453
AS	Assamese	3453
as	Assamese	3453
AV	Avaric	3453
av	Avaric	3453
AY	Aymara	3453
ay	Aymara	3453
AZ	Azerbaijani	3453
az	Azerbaijani	3453
BA	Bashkir	3453
ba	Bashkir	3453
BE	Belarusian	3453
be	Belarusian	3453

COPYRIGHT VDA 2026

Applicable codes

Code	Name/description	Code list
BG	Bulgarian	3453
bg	Bulgarian	3453
BH	Bihari languages	3453
bh	Bihari languages	3453
BI	Bislama	3453
bi	Bislama	3453
BM	Bambara	3453
bm	Bambara	3453
BN	Bengali	3453
bn	Bengali	3453
BO	Tibetan	3453
bo	Tibetan	3453
BR	Breton	3453
br	Breton	3453
BS	Bosnian	3453
bs	Bosnian	3453
CA	Catalan; Valencian	3453
ca	Catalan; Valencian	3453
CE	Chechen	3453
ce	Chechen	3453
CH	Chamorro	3453
ch	Chamorro	3453
CO	Corsican	3453
co	Corsican	3453
CR	Cree	3453
cr	Cree	3453
CS	Czech	3453
cs	Czech	3453
CU	Church Slavic; Old Slavonic; Church Slavonic; Old Bulgarian; Old Church Slavonic	3453
cu	Church Slavic; Old Slavonic; Church Slavonic; Old Bulgarian; Old Church Slavonic	3453
CV	Chuvash	3453
cv	Chuvash	3453
CY	Welsh	3453
cy	Welsh	3453
DA	Danish	3453
da	Danish	3453
DE	German	3453
de	German	3453
DV	Divehi; Dhivehi; Maldivian	3453
dv	Divehi; Dhivehi; Maldivian	3453
DZ	Dzongkha	3453
dz	Dzongkha	3453
EE	Ewe	3453
ee	Ewe	3453
EL	Greek; Modern (1453-)	3453
el	Greek; Modern (1453-)	3453
EN	English	3453
en	English	3453
EO	Esperanto	3453
eo	Esperanto	3453
ES	Spanish; Castilian	3453
es	Spanish; Castilian	3453
ET	Estonian	3453
et	Estonian	3453
EU	Basque	3453

COPYRIGHT VDA 2026

Applicable codes

Code	Name/description	Code list
eu	Basque	3453
FA	Persian	3453
fa	Persian	3453
FF	Fulah	3453
ff	Fulah	3453
FI	Finnish	3453
fi	Finnish	3453
FJ	Fijian	3453
fj	Fijian	3453
FO	Faroese	3453
fo	Faroese	3453
FR	French	3453
fr	French	3453
FY	Western Frisian	3453
fy	Western Frisian	3453
GA	Irish	3453
ga	Irish	3453
GD	Gaelic; Scottish Gaelic	3453
gd	Gaelic; Scottish Gaelic	3453
GL	Galician	3453
gl	Galician	3453
GN	Guarani	3453
gn	Guarani	3453
GU	Gujarati	3453
gu	Gujarati	3453
GV	Manx	3453
gv	Manx	3453
HA	Hausa	3453
ha	Hausa	3453
HE	Hebrew	3453
he	Hebrew	3453
HI	Hindi	3453
hi	Hindi	3453
HO	Hiri Motu	3453
ho	Hiri Motu	3453
HR	Croatian	3453
hr	Croatian	3453
HT	Haitian; Haitian Creole	3453
ht	Haitian; Haitian Creole	3453
HU	Hungarian	3453
hu	Hungarian	3453
HY	Armenian	3453
hy	Armenian	3453
HZ	Herero	3453
hz	Herero	3453
IA	Interlingua (International Auxiliary Language Association)	3453
ia	Interlingua (International Auxiliary Language Association)	3453
ID	Indonesian	3453
id	Indonesian	3453
IE	Interlingue; Occidental	3453
ie	Interlingue; Occidental	3453
IG	Igbo	3453
ig	Igbo	3453
II	Sichuan Yi; Nuosu	3453
ii	Sichuan Yi; Nuosu	3453

COPYRIGHT VDA 2026

Applicable codes

Code	Name/description	Code list
IK	Inupiaq	3453
ik	Inupiaq	3453
IO	Ido	3453
io	Ido	3453
IS	Icelandic	3453
is	Icelandic	3453
IT	Italian	3453
it	Italian	3453
IU	Inuktiut	3453
iu	Inuktiut	3453
JA	Japanese	3453
ja	Japanese	3453
JV	Javanese	3453
jv	Javanese	3453
JW	Javanese	3453
jw	Javanese	3453
KA	Georgian	3453
ka	Georgian	3453
KG	Kongo	3453
kg	Kongo	3453
KI	Kikuyu; Gikuyu	3453
ki	Kikuyu; Gikuyu	3453
KJ	Kuanyama; Kwanyama	3453
kj	Kuanyama; Kwanyama	3453
KK	Kazakh	3453
kk	Kazakh	3453
KL	Kalaallisut; Greenlandic	3453
kl	Kalaallisut; Greenlandic	3453
KM	Central Khmer	3453
km	Central Khmer	3453
KN	Kannada	3453
kn	Kannada	3453
KO	Korean	3453
ko	Korean	3453
KR	Kanuri	3453
kr	Kanuri	3453
KS	Kashmiri	3453
ks	Kashmiri	3453
KU	Kurdish	3453
ku	Kurdish	3453
KV	Komi	3453
kv	Komi	3453
KW	Cornish	3453
kw	Cornish	3453
KY	Kirghiz; Kyrgyz	3453
ky	Kirghiz; Kyrgyz	3453
LA	Latin	3453
la	Latin	3453
LB	Luxembourgish; Letzeburgesch	3453
lb	Luxembourgish; Letzeburgesch	3453
LG	Ganda	3453
lg	Ganda	3453
LI	Limburgan; Limburger; Limburgish	3453
li	Limburgan; Limburger; Limburgish	3453
LN	Lingala	3453

COPYRIGHT VDA 2026

Applicable codes

Code	Name/description	Code list
ln	Lingala	3453
LO	Lao	3453
lo	Lao	3453
LT	Lithuanian	3453
lt	Lithuanian	3453
LU	Luba-Katanga	3453
lu	Luba-Katanga	3453
LV	Latvian	3453
lv	Latvian	3453
MG	Malagasy	3453
mg	Malagasy	3453
MH	Marshallese	3453
mh	Marshallese	3453
MI	Maori	3453
mi	Maori	3453
MK	Macedonian	3453
mk	Macedonian	3453
ML	Malayalam	3453
ml	Malayalam	3453
MN	Mongolian	3453
mn	Mongolian	3453
MO	Moldavian; Moldovan	3453
mo	Moldavian; Moldovan	3453
MR	Marathi	3453
mr	Marathi	3453
MS	Malay	3453
ms	Malay	3453
MT	Maltese	3453
mt	Maltese	3453
MY	Burmese	3453
my	Burmese	3453
NA	Nauru	3453
na	Nauru	3453
NB	Bokmal Norwegian; Norwegian Bokmal	3453
nb	Bokmal Norwegian; Norwegian Bokmal	3453
ND	Ndebele; North; North Ndebele	3453
nd	Ndebele; North; North Ndebele	3453
NE	Nepali	3453
ne	Nepali	3453
NG	Ndonga	3453
ng	Ndonga	3453
NL	Dutch; Flemish	3453
nl	Dutch; Flemish	3453
NN	Norwegian Nynorsk; Nynorsk, Norwegian	3453
nn	Norwegian Nynorsk; Nynorsk, Norwegian	3453
NO	Norwegian	3453
no	Norwegian	3453
NR	Ndebele; South; South Ndebele	3453
nr	Ndebele; South; South Ndebele	3453
NV	Navajo; Navaho	3453
nv	Navajo; Navaho	3453
NY	Chichewa; Chewa; Nyanja	3453
ny	Chichewa; Chewa; Nyanja	3453
OC	Occitan (post 1500)	3453
oc	Occitan (post 1500)	3453

COPYRIGHT VDA 2026

Applicable codes

Code	Name/description	Code list
OJ	Ojibwa	3453
oj	Ojibwa	3453
OM	Oromo	3453
om	Oromo	3453
OR	Oriya	3453
or	Oriya	3453
OS	Ossetian; Ossetic	3453
os	Ossetian; Ossetic	3453
PA	Panjabi; Punjabi	3453
pa	Panjabi; Punjabi	3453
PI	Pali	3453
pi	Pali	3453
PL	Polish	3453
pl	Polish	3453
PS	Pushto; Pashto	3453
ps	Pushto; Pashto	3453
PT	Portuguese	3453
pt	Portuguese	3453
QU	Quechua	3453
qu	Quechua	3453
RM	Romansh	3453
rm	Romansh	3453
RN	Rundi	3453
rn	Rundi	3453
RO	Romanian	3453
ro	Romanian	3453
RU	Russian	3453
ru	Russian	3453
RW	Kinyarwanda	3453
rw	Kinyarwanda	3453
SA	Sanskrit	3453
sa	Sanskrit	3453
SC	Sardinian	3453
sc	Sardinian	3453
SD	Sindhi	3453
sd	Sindhi	3453
SE	Northern Sami	3453
se	Northern Sami	3453
SG	Sango	3453
sg	Sango	3453
SH	Serbo-Croatian	3453
sh	Serbo-Croatian	3453
SI	Sinhala; Sinhalese	3453
si	Sinhala; Sinhalese	3453
SK	Slovak	3453
sk	Slovak	3453
SL	Slovenian	3453
sl	Slovenian	3453
SM	Samoan	3453
sm	Samoan	3453
SN	Shona	3453
sn	Shona	3453
SO	Somali	3453
so	Somali	3453
SQ	Albanian	3453

COPYRIGHT VDA 2026

Applicable codes

Code	Name/description	Code list
sq	Albanian	3453
SR	Serbian	3453
sr	Serbian	3453
SS	Swati	3453
ss	Swati	3453
ST	Sotho, Southern	3453
st	Sotho, Southern	3453
SU	Sundanese	3453
su	Sundanese	3453
SV	Swedish	3453
sv	Swedish	3453
SW	Swahili	3453
sw	Swahili	3453
TA	Tamil	3453
ta	Tamil	3453
TE	Telugu	3453
te	Telugu	3453
TG	Tajik	3453
tg	Tajik	3453
TH	Thai	3453
th	Thai	3453
TI	Tigrinya	3453
ti	Tigrinya	3453
TK	Turkmen	3453
tk	Turkmen	3453
TL	Tagalog	3453
tl	Tagalog	3453
TN	Tswana	3453
tn	Tswana	3453
TO	Tonga (Tonga Islands)	3453
to	Tonga (Tonga Islands)	3453
TR	Turkish	3453
tr	Turkish	3453
TS	Tsonga	3453
ts	Tsonga	3453
TT	Tatar	3453
tt	Tatar	3453
TW	Twi	3453
tw	Twi	3453
TY	Tahitian	3453
ty	Tahitian	3453
UG	Uighur; Uyghur	3453
ug	Uighur; Uyghur	3453
UK	Ukrainian	3453
uk	Ukrainian	3453
UR	Urdu	3453
ur	Urdu	3453
UZ	Uzbek	3453
uz	Uzbek	3453
VE	Venda	3453
ve	Venda	3453
VI	Vietnamese	3453
vi	Vietnamese	3453
VO	Volapük	3453
vo	Volapük	3453

COPYRIGHT VDA 2026

Applicable codes

Code	Name/description	Code list
WA	Walloon	3453
wa	Walloon	3453
WO	Wolof	3453
wo	Wolof	3453
XH	Xhosa	3453
xh	Xhosa	3453
YI	Yiddish	3453
yi	Yiddish	3453
YO	Yoruba	3453
yo	Yoruba	3453
ZA	Zhuang; Chuang	3453
za	Zhuang; Chuang	3453
ZH	Chinese	3453
zh	Chinese	3453
ZU	Zulu	3453
zu	Zulu	3453

4053 Delivery or transport terms description code

Code	Name/description	Code list
CFR	COST AND FREIGHT	ODDC004(1)
CIF	COST INSURANCE AND FREIGHT	ODDC004(1)
CIP	CARRIAGE AND INSURANCE PAID TO	ODDC004(1)
CPT	CARRIAGE PAID TO	ODDC004(1)
DAF	DELIVERED AT FRONTIER	ODDC004(1)
DAP	Delivered At Place (insert named place of destination)	ODDC004(1)
DAT	Delivered At Terminal (insert named terminal at port or place of destination)	ODDC004(1)
DDP	DELIVERED DUTY PAID	ODDC004(1)
DDU	DELIVERED DUTY UNPAID	ODDC004(1)
DEQ	DELIVERED EX QUAY (DUTY PAID)	ODDC004(1)
DES	DELIVERED EX SHIP	ODDC004(1)
DPU	Delivered at Place Unloaded	ODDC004(1)
EXW	EX WORKS	ODDC004(1)
FAS	FREE ALONGSIDE SHIP	ODDC004(1)
FCA	FREE CARRIER	ODDC004(1)
FOA	FREE ON AIRCRAFT	ODDC004(1)
FOB	FREE ON BOARD	ODDC004(1)
FOR	FREE ON RAIL	ODDC004(1)

4078 Handling instruction description

Code	Name/description	Code list
COL	Collection	4078
DEL	Delivery	4078

4079 Codeliste to special transport conditions

Code	Name/description	Code list
101	Please advise shipment @ telephone number: ... (text) telephone number for advice	4441(3)
107	Delivery requires truck with lifting ramp/platform	4441(3)
108	Shipment to be delivered without directly unloading	4441(3)
109	Handle with care, sensitive goods!	4441(3)
110	Goods to be transported lying	4441(3)
113	To be transported in advised temperature range!	4441(3)
125	Direct pick-up	4441(3)
126	Lifting platform required	4441(3)
127	Loading / unloading from the rear	4441(3)
128	Loading / unloading from the side (both sides)	4441(3)
129	Loading / unloading from the side (left side)	4441(3)

COPYRIGHT VDA 2026

Applicable codes

Code	Name/description	Code list
130	Loading / unloading from the side (right side)	4441(3)
131	Loading / unloading with crane	4441(3)
132	Self loading / self unloading	4441(3)
133	Height restriction	4441(3)
134	Fork lift required	4441(3)
135	Anti slip matting required	4441(3)
136	No transport means with loaded dangerous goods	4441(3)
137	Exchange of loading means	4441(3)
138	Only self-propelled truck	4441(3)
139	7,5 Ton	4441(3)
140	Tautliner	4441(3)
141	Detailed instructions in the free text (FTX segment)	4441(3)
4183	Special condition code	
Code	Name/description	Code list
N	no, goods are not subject to customs procedures	JAI048
Y	yes, goods are dutiable/subject to customs procedures	JAI048
DCA	Relevant to DeCA (Spain)	ODDC013(1)
4233	Marking instructions code	
Code	Name/description	Code list
16	Buyer's instructions	4233
17	Seller's instructions	4233
4347	Product identifier code qualifier	
Code	Name/description	Code list
1	Additional identification	4347
4441	Free text description code	
Code	Name/description	Code list
A	Bypass delivery	ODDC153(1)
B	Cross docking	ODDC153(1)
C	Backorder	ODDC153(1)
D	Extra tour	ODDC153(1)
P	Prioritised	ODDC153(1)
S	Standard	ODDC153(1)
-	No restrictions for the transport of dangerous goods	4441
B	Passage forbidden through tunnels of category B, C, D and E	4441
B/D	Passage forbidden through tunnels of category B and C when carried in tanks; Passage forbidden through tunnels of category D and E	4441
B/E	Passage forbidden through tunnels of category B, C and D when carried in tanks; Passage forbidden through tunnels of category E	4441
B1000C	Passage forbidden through tunnels of category B when the total net explosive mass per transport unit is greater than 1000 kg Passage forbidden through tunnels of category C, D and E	4441
C	Passage forbidden through tunnels of category C, D and E	4441
C/D	Passage forbidden through tunnels of category C when carried in tanks:Passage forbidden through tunnels of category D and E	4441
C/E	Passage forbidden through tunnels of category C and D when carried in tanks; Passage forbidden through tunnels of category E	4441
C5000D	Passage forbidden through tunnels of category C when the total net explosive mass per transport unit is greater than 5000 kg; Passage forbidden through tunnels of category D and E	4441
D	Passage forbidden through tunnels of category D and E	4441
D/E	Passage forbidden through tunnels of category D when carried in bulk or in tanks; Passage forbidden through tunnels of category E	4441
E	Passage forbidden through tunnels of category E	4441
4451	Text subject code qualifier	

COPYRIGHT VDA 2026

Applicable codes

Code	Name/description	Code list
AAD	Dangerous goods technical name	4451
AAR	Terms of delivery	4451
HAZ	Hazard information	4451
LIN	Line item	4451
OSI	Other service information	4451
SIC	Consignment documentary instruction	4451

6063 Quantity type code qualifier

Code	Name/description	Code list
12	Despatch quantity	6063
52	Quantity per pack	6063
131	Delivery quantity	6063
171	Maximum stackability	6063
490	Constituent element or component quantity	6063

6311 Measurement purpose code qualifier

Code	Name/description	Code list
AAE	Measurement	6311
AAX	Consignment measurement	6311
AAY	Package measurement	6311
AAZ	Handling unit measurement	6311
ABR	Certified weight	6311
ABU	Quota	6311
ACA	Space occupied	6311
LMT	Loading meters	6311
PD	Physical dimensions (product ordered)	6311
TE	Temperature	6311

6313 Measured attribute code

Code	Name/description	Code list
AAA	Net weight	6313
AAB	Goods item gross weight	6313
AAD	Consignment gross weight	6313
AAL	Net weight	6313
ABJ	Volume	6313
ACV	Loading meters	6313
AFE	Maximum stacking weight	6313
AFN	Net explosive weight	6313
G	Gross weight	6313
HT	Height dimension	6313
LN	Length	6313
T	Tare weight	6313
WD	Width dimension	6313

6411 Measurement unit code

Code	Name/description	Code list
C62	one	6411
CEL	degree Celsius	6411
CMT	centimetre	6411
DMQ	cubic decimetre	6411
DR	drum	6411
GRM	gram	6411
KGM	Kilogramm	6411
KMT	kilometre	6411
LEF	leaf	6411
LTR	litre	6411

COPYRIGHT VDA 2026

Applicable codes

Code	Name/description	Code list
MLT	millilitre	6411
MMT	millimetre	6411
MTK	square metre	6411
MTQ	cubic metre	6411
MTR	metre	6411
PCE	piece	6411
PR	pair	6411
RO	roll	6411
SET	set	6411
TNE	tonne (metric ton)	6411

7009 Item description code

Code	Name/description	Code list
11	Production	JAI004
12	Sparepart	JAI004
13	Production and sparepart	JAI004
14	Try-out	JAI004
15	Pilot	JAI004
16	Additional requirement	JAI004
17	Initial sample	JAI004
18	Sample	JAI004
19	Other	JAI004

7041 Power type code

Code	Name/description	Code list
1	Diesel	7041
2	Diesel and electric	7041
3	Electric	7041
4	Liquid Propane Gas	7041
5	Petrol	7041
6	Petrol and electric	7041
7	Hydrogen	7041
8	Compressed Natural Gas	7041
9	Liquified Natural Gas	7041

7064 Type of packages

Code	Name/description	Code list
080607	VDA GLT 800 x 600 x 700	7064
121010	VDA GLT 1200 x 1000 x 975	7064
0000BEH	sonst. Flüssigkeitsbehälter, Gebinde, Kanister, Hobbock, Tank, Container, nicht näher spezifiziert	7064
0000BLE	Sheet metal packaging, sheet metal coils, not specified	7064
0000BUN	Bunches, not specified	7064
0000FAS	Barrel, not specified	7064
0000LOS	Loose material (unpacked)	7064
0000PAL	120 x 80 cm, palette until 15 cm high	7064
0000SAC	Bag, not specified	7064
0000SCH	Box, case, package, not specified	7064
0000SON	Additional packages, not specified	7064
0000UMR	Hoop, tightening strap, not specified	7064
0001PAL	120 x 80 cm, until 50 cm high	7064
0001SCH	Box, case, package: Dimension until 30 x 20 x 14 cm	7064
0001SON	Additional packages > 1 cbm, not specified	7064
0002PAL	120 x 80 cm, palette until 100 cm high	7064
0002SCH	Box, case, package: Dimension until 30 x 20 x 28 cm	7064
0002SON	Additional packages < 1 cbm, not specified	7064

COPYRIGHT VDA 2026

Applicable codes

Code	Name/description	Code list
0003PAL	120 x 80 cm, palette until 150 cm high	7064
0003SCH	Box, case, package: Dimension until 40 x 30 x 14 cm	7064
0004PAL	120 x 80 cm, palette until 200 cm high	7064
0004SCH	Box, case, package: Dimension until 40 x 20 x 28 cm	7064
0005PAL	120 x 100 cm, palette until 50 cm high	7064
0005SCH	Box, case, package: Dimension until 50 x 30 x 20 cm	7064
0006PAL	120 x 100 cm, palette until 100 cm high	7064
0006SCH	Box, case, package: Dimension until 50 x 50 x 50 cm	7064
0007PAL	120 x 100 cm, paette until 150 cm high	7064
0007SCH	Box, case, package: Dimension until 58 x 48 x 36 cm	7064
0008PAL	120 x 100 cm, palette until 200 cm high	7064
0008SCH	Box, case, package: Dimension until 60 x 40 x 14 cm	7064
0009PAL	Palette: 120 x 100 cm, Flachpalette bis 15 cm Höhe	7064
0009SCH	Box, case, package: Dimension until 60 x 40 x 28 cm	7064
0010PAL	Palette 160 x 120 x 15 cm	7064
0010SCH	Box, case, package: Dimension until 80 x 60 x 40 cm	7064
0011SCH	Box, case, package: Dimension until 98 x 58 x 36 cm	7064
0012SCH	Box, case, package: Dimension until 100 x 60 x 73 cm	7064
0013SCH	Box, case, package: Dimension until 120 x 78 x 110 cm	7064
0014SCH	Box, case, package: Dimension until 120 x 80 x 40 cm	7064
0015SCH	Box, case, package: Dimension until 120 x 80 x 90 cm	7064
0016SCH	Box, case, package: Dimension until 120 x 100 x 90 cm	7064
0017SCH	Schachtel, Kiste, Paket: Abmessung bis 160 x 120 x 90 cm	7064
12081A	VDA KLT Ladeeinheit Abschlussdeckel 1200 x 800 x 84	7064
12081AE	VDA KLT Ladeeinheit Abschlussdeckel 1200 x 800 x 84	7064
1208A	VDA KLT Ladeeinheit Abschlussdeckel 1200 x 800 x 94	7064
1208SP	VDA KLT Sicherungsplatte für Palette 1200 x 800	7064
1210A	VDA KLT Ladeeinheit Abschlussdeckel 1200 x 1000 x 94	7064
1210AE	VDA KLT Ladeeinheit Abschlussdeckel 1200 x 1000 x 94	7064
13L	EWPS Zwischenlage 13 Zoll beschichtet	7064
13S	EWPS Zwischenlage 13 Zoll unbeschichtet	7064
14L	EWPS Zwischenlage 14 Zoll beschichtet	7064
14S	EWPS Zwischenlage 14 Zoll unbeschichtet	7064
15L	EWPS Zwischenlage 15 Zoll beschichtet	7064
15S	EWPS Zwischenlage 15 Zoll unbeschichtet	7064
16L	EWPS Zwischenlage 16 Zoll beschichtet	7064
16S	EWPS Zwischenlage 16 Zoll unbeschichtet	7064
175S	EWPS Zwischenlage 17.5 Zoll unbeschichtet	7064
175SDC	EWPS Zwischenlage 17.5 Zoll unbeschichtet Steilschulter	7064
17L	EWPS Zwischenlage 17 Zoll beschichtet	7064
17S	EWPS Zwischenlage 17 Zoll unbeschichtet	7064
18L	EWPS Zwischenlage 18 Zoll beschichtet	7064
18S	EWPS Zwischenlage 18 Zoll unbeschichtet	7064
195SDC	EWPS Zwischenlage 19.5 Zoll unbeschichtet Steilschulter	7064
19L	EWPS Zwischenlage 19 Zoll beschichtet	7064
19S	EWPS Zwischenlage 19 Zoll unbeschichtet	7064
1BP	EWPS Grundpalette Größe 1	7064
1TP	EWPS Abschlussrahmen Größe 1	7064
20L	EWPS Zwischenlage 20 Zoll beschichtet	7064
20S	EWPS Zwischenlage 20 Zoll unbeschichtet	7064
20STBS	EWPS Zwischenlage 20 Zoll unbeschichtet Schrägschulter	7064
21L	EWPS Zwischenlage 21 Zoll beschichtet	7064
21S	EWPS Zwischenlage 21 Zoll unbeschichtet	7064
225SDC	EWPS Zwischenlage 22.5 Zoll unbeschichtet Steilschulter	7064
22L	EWPS Zwischenlage 22 Zoll beschichtet	7064

COPYRIGHT VDA 2026

Applicable codes

Code	Name/description	Code list
22S	EWPS Zwischenlage 22 Zoll unbeschichtet	7064
2BP	EWPS Grundpalette Größe 2	7064
2TP	EWPS Abschlussrahmen Größe 2	7064
3115RE	VDA R KLT ESD300 x 200 x 147	7064
3115RLE	VDA RL KLT ESD 300 x 200 x 147	7064
3147RL	VDA RL KLT 300 x 200 x 147	7064
31DE	VDA KLT Deckel ESD 300 x 200	7064
3214C	VDA C KLT 300 x 200 x 147	7064
3215R	VDA R KLT 300 x 200 x 147	7064
3217C	VDA C KLT 300 x 200 x 174	7064
35D	VDA KLT Deckel 300 x 200	7064
3715RF	VDA R KLT 300 x 200 x 147 mit RFID (Retrofit)	7064
3747RLF	VDA RL KLT 300 x 200 x147 mit RFID (Retrofit)	7064
3BP	EWPS Grundpalette Größe 3	7064
3TP	EWPS Abschlussrahmen Größe 3	7064
4047RLE	VDA RL KLT ESD 400 x 300 x 147	7064
4080RLE	VDA RL KLT ESD 400 x 300 x 280	7064
4115RE	VDA R KLT ESD 400 x 300 x 147	7064
4129RE	VDA R KLT ESD 400 x 300 x 280	7064
4147RL	VDA RL KLT 400 x 300 x 147	7064
41DE	VDA KLT Deckel ESD 400 x 300	7064
4280RL	VDA RL KLT 400 x 300 x 280	7064
4314C	VDA C KLT 400 x 300 x 147	7064
4315R	VDA R KLT 400 x 300 x 147	7064
4317C	VDA C KLT 400 x 300 x 174	7064
4321C	VDA C KLT 400 x 300 x 214	7064
4328C	VDA C KLT 400 x 300 x 280	7064
4329R	VDA R KLT 400 x 300 x 280	7064
45D	VDA KLT Deckel 400 x 300	7064
4713RLF	VDA RL KLT 400 x 300 x 213 mit RFID (Retrofit)	7064
4715RF	VDA R KLT 400 x 300 x 147 mit RFID (Retrofit)	7064
4722RF	VDA R KLT 400 x 300 x 213 mit RFID (Retrofit)	7064
4729RF	VDA R KLT 400 x 300 x 280 mit RFID (Retrofit)	7064
4747RLF	VDA RL KLT 400 x 300 x 147 mit RFID (Retrofit)	7064
4780RLF	VDA RL KLT 400 x 300 x 280 mit RFID (Retrofit)	7064
4BP	EWPS Grundpalette Größe 4	7064
4TP	EWPS Abschlussrahmen Größe 4	7064
6047RLE	VDA RL KLT ESD 600 x 400 x 147	7064
6080RLE	VDA RL KLT ESD 600 x 400 x 280	7064
6115RE	VDA R KLT ESD 600 x 400 x 147	7064
6129RE	VDA R KLT ESD 600 x 400 x 280	7064
6147RL	VDA RL KLT 600 x 400 x 147	7064
61DE	VDA KLT Deckel ESD 600 x 400	7064
6280RL	VDA RL KLT 600 x 400 x 280	7064
6410F	VDA F KLT 600 x 400 x 280 (94.5)	7064
6414C	VDA C KLT 600 x 400 x 147	7064
6415R	VDA R KLT 600 x 400 x 147	7064
6417C	VDA C KLT 600 x 400 x 174	7064
6421C	VDA C KLT 600 x 400 x 214	7064
6428C	VDA C KLT 600 x 400 x 280	7064
6429R	VDA R KLT 600 x 400 x 280	7064
65D	VDA KLT Deckel 600 x 400	7064
6713RLF	VDA RL KLT 600 x 400 x 213 mit RFID (Retrofit)	7064
6715RF	VDA R KLT 600 x 400 x 147 mit RFID (Retrofit)	7064
6722RF	VDA R KLT 600 x 400 x 213 mit RFID (Retrofit)	7064

COPYRIGHT VDA 2026

Applicable codes

Code	Name/description	Code list
6729RF	VDA R KLT 600 x 400 x 280 with RFID (Retrofit)	7064
6747RLF	VDA RL KLT 600 x 400 x 147 mit RFID (Retrofit)	7064
6780RLF	VDA RL KLT 600 x 400 x 280 mit RFID (Retrofit)	7064
COPACK	Virtuelle Verpackung	7064
UNPACKD	unverpackte Ware (lose oder Schüttgut)	7064

7065 Package type description code

Code	Name/description	Code list
43	Bag, super bulk	7065
44	Bag, polybag	7065
1A	Drum, steel	7065
1B	Drum, aluminium	7065
1D	Drum, plywood	7065
1F	Container, flexible	7065
1G	Drum, fibre	7065
1W	Drum, wooden	7065
2C	Barrel, wooden	7065
3A	Jerrican, steel	7065
3H	Jerrican, plastic	7065
4A	Box, steel	7065
4B	Box, aluminium	7065
4C	Box, natural wood	7065
4D	Box, plywood	7065
4F	Box, reconstituted wood	7065
4G	Box, fibreboard	7065
4H	Box, plastic	7065
5H	Bag, woven plastic	7065
5L	Bag, textile	7065
5M	Bag, paper	7065
6H	Composite packaging, plastic receptacle	7065
6P	Composite packaging, glass receptacle	7065
7A	Case, car	7065
7B	Case, wooden	7065
8A	Pallet, wooden	7065
8B	Crate, wooden	7065
8C	Bundle, wooden	7065
AA	Intermediate bulk container, rigid plastic	7065
AB	Receptacle, fibre	7065
AC	Receptacle, paper	7065
AD	Receptacle, wooden	7065
AE	Aerosol	7065
AF	Pallet, modular, collars 80cms × 60cms	7065
AG	Pallet, shrinkwrapped	7065
AH	Pallet, 100cms × 110cms	7065
AI	Clamshell	7065
AJ	Cone	7065
AL	Ball	7065
AM	Ampoule, non-protected	7065
AP	Ampoule, protected	7065
AT	Atomizer	7065
AV	Capsule	7065
B4	Belt	7065
BA	Barrel	7065
BB	Bobbin	7065
BC	Bottlecrate / bottlerack	7065

COPYRIGHT VDA 2026

Applicable codes

Code	Name/description	Code list
BD	Board	7065
BE	Bundle	7065
BF	Balloon, non-protected	7065
BG	Bag	7065
BH	Bunch	7065
BI	Bin	7065
BJ	Bucket	7065
BK	Basket	7065
BL	Bale, compressed	7065
BM	Basin	7065
BN	Bale, non-compressed	7065
BO	Bottle, non-protected, cylindrical	7065
BP	Balloon, protected	7065
BQ	Bottle, protected cylindrical	7065
BR	Bar	7065
BS	Bottle, non-protected, bulbous	7065
BT	Bolt	7065
BU	Butt	7065
BV	Bottle, protected bulbous	7065
BW	Box, for liquids	7065
BX	Box	7065
BY	Board, in bundle/bunch/truss	7065
BZ	Bars, in bundle/bunch/truss	7065
CA	Can, rectangular	7065
CB	Crate, beer	7065
CC	Churn	7065
CD	Can, with handle and spout	7065
CE	Creel	7065
CF	Coffer	7065
CG	Cage	7065
CH	Chest	7065
CI	Canister	7065
CJ	Coffin	7065
CK	Cask	7065
CL	Coil	7065
CM	Card	7065
CN	Container, not otherwise specified as transport equipment	7065
CO	Carboy, non-protected	7065
CP	Carboy, protected	7065
CQ	Cartridge	7065
CR	Crate	7065
CS	Case	7065
CT	Carton	7065
CU	Cup	7065
CV	Cover	7065
CW	Cage, roll	7065
CX	Can, cylindrical	7065
CY	Cylinder	7065
CZ	Canvas	7065
DA	Crate, multiple layer, plastic	7065
DB	Crate, multiple layer, wooden	7065
DC	Crate, multiple layer, cardboard	7065
DG	Cage, Commonwealth Handling Equipment Pool (CHEP)	7065
DH	Box, Commonwealth Handling Equipment Pool (CHEP), Eurobox	7065
DI	Drum, iron	7065

COPYRIGHT VDA 2026

Applicable codes

Code	Name/description	Code list
DJ	Demijohn, non-protected	7065
DK	Crate, bulk, cardboard	7065
DL	Crate, bulk, plastic	7065
DM	Crate, bulk, wooden	7065
DN	Dispenser	7065
DP	Demijohn, protected	7065
DR	Drum	7065
DS	Tray, one layer no cover, plastic	7065
DT	Tray, one layer no cover, wooden	7065
DU	Tray, one layer no cover, polystyrene	7065
DV	Tray, one layer no cover, cardboard	7065
DW	Tray, two layers no cover, plastic tray	7065
DX	Tray, two layers no cover, wooden	7065
DY	Tray, two layers no cover, cardboard	7065
EC	Bag, plastic	7065
ED	Case, with pallet base	7065
EE	Case, with pallet base, wooden	7065
EF	Case, with pallet base, cardboard	7065
EG	Case, with pallet base, plastic	7065
EH	Case, with pallet base, metal	7065
EI	Case, isothermic	7065
EN	Envelope	7065
FB	Flexibag	7065
FC	Crate, fruit	7065
FD	Crate, framed	7065
FE	Flexitank	7065
FI	Firkin	7065
FL	Flask	7065
FO	Footlocker	7065
FP	Filmpack	7065
FR	Frame	7065
FT	Foodtainer	7065
FW	Cart, flatbed	7065
FX	Bag, flexible container	7065
GB	Bottle, gas	7065
GI	Girder	7065
GL	Container, gallon	7065
GR	Receptacle, glass	7065
GU	Tray, containing horizontally stacked flat items	7065
GY	Bag, gunny	7065
GZ	Girders, in bundle/bunch/truss	7065
HA	Basket, with handle, plastic	7065
HB	Basket, with handle, wooden	7065
HC	Basket, with handle, cardboard	7065
HG	Hogshead	7065
HN	Hanger	7065
HR	Hamper	7065
IA	Package, display, wooden	7065
IB	Package, display, cardboard	7065
IC	Package, display, plastic	7065
ID	Package, display, metal	7065
IE	Package, show	7065
IF	Package, flow	7065
IG	Package, paper wrapped	7065
IH	Drum, plastic	7065

COPYRIGHT VDA 2026

Applicable codes

Code	Name/description	Code list
IK	Package, cardboard, with bottle grip-holes	7065
IL	Tray, rigid, lidded stackable (CEN TS 14482:2002)	7065
IN	Ingot	7065
IZ	Ingots, in bundle/bunch/truss	7065
JB	Bag, jumbo	7065
JC	Jerrican, rectangular	7065
JG	Jug	7065
JR	Jar	7065
JT	Jutebag	7065
JY	Jerrican, cylindrical	7065
KG	Keg	7065
KI	Kit	7065
LE	Luggage	7065
LG	Log	7065
LT	Lot	7065
LU	Lug	7065
LV	Liftvan	7065
LZ	Logs, in bundle/bunch/truss	7065
MA	Crate, metal	7065
MB	Bag, multiply	7065
MC	Crate, milk	7065
ME	Container, metal	7065
MR	Receptacle, metal	7065
MS	Sack, multi-wall	7065
MT	Mat	7065
MW	Receptacle, plastic wrapped	7065
MX	Matchbox	7065
NA	Not available	7065
NE	Unpacked or unpackaged	7065
NF	Unpacked or unpackaged, single unit	7065
NG	Unpacked or unpackaged, multiple units	7065
NS	Nest	7065
NT	Net	7065
NU	Net, tube, plastic	7065
NV	Net, tube, textile	7065
O1	Two sided cage on wheels with fixing strap	7065
O2	Trolley	7065
O3	Oneway pallet ISO 0 - 1/2 EURO Pallet	7065
O4	Oneway pallet ISO 1 - 1/1 EURO Pallet	7065
O5	Oneway pallet ISO 2 - 2/1 EURO Pallet	7065
O6	Pallet with exceptional dimensions	7065
O7	Wooden pallet 40 cm x 80 cm	7065
O8	Plastic pallet SRS 60 cm x 80 cm	7065
O9	Plastic pallet SRS 80 cm x 120 cm	7065
OA	Pallet, CHEP 40 cm x 60 cm	7065
OB	Pallet, CHEP 80 cm x 120 cm	7065
OC	Pallet, CHEP 100 cm x 120 cm	7065
OD	Pallet, AS 4068-1993	7065
OE	Pallet, ISO T11	7065
OF	Platform, unspecified weight or dimension	7065
OG	Pallet ISO 0 - 1/2 EURO Pallet	7065
OH	Pallet ISO 1 - 1/1 EURO Pallet	7065
OI	Pallet ISO 2 - 2/1 EURO Pallet	7065
OJ	1/4 EURO Pallet	7065
OK	Block	7065

COPYRIGHT VDA 2026

Applicable codes

Code	Name/description	Code list
OL	1/8 EURO Pallet	7065
OM	Synthetic pallet ISO 1	7065
ON	Synthetic pallet ISO 2	7065
OP	Wholesaler pallet	7065
OQ	Pallet 80 X 100 cm	7065
OR	Pallet 60 X 100 cm	7065
OS	Oneway pallet	7065
OT	Octabin	7065
OU	Container, outer	7065
OV	Returnable pallet	7065
OW	Large bag, pallet sized	7065
OX	A wheeled pallet with raised rim (81 x 67 x 135)	7065
OY	A wheeled pallet with raised rim (81 x 72 x 135)	7065
OZ	A wheeled pallet with raised rim (81 x 60 x 16)	7065
P1	CHEP pallet 60 cm x 80 cm	7065
P2	Pan	7065
P3	LPR pallet 60 cm x 80 cm	7065
P4	LPR pallet 80 cm x 120 cm	7065
PA	Packet	7065
PB	Pallet, box	7065
PC	Parcel	7065
PD	Pallet, modular, collars 80cms * 100cms	7065
PE	Pallet, modular, collars 80cms * 120cms	7065
PF	Pen	7065
PG	Plate	7065
PH	Pitcher	7065
PI	Pipe	7065
PJ	Punnet	7065
PK	Package	7065
PL	Pail	7065
PN	Plank	7065
PO	Pouch	7065
PP	Piece	7065
PR	Receptacle, plastic	7065
PT	Pot	7065
PU	Tray pack	7065
PV	Pipes, in bundle/bunch/truss	7065
PX	Pallet	7065
PY	Plates, in bundle/bunch/truss	7065
PZ	Planks, in bundle/bunch/truss	7065
QA	Drum, steel, non-removable head	7065
QB	Drum, steel, removable head	7065
QC	Drum, aluminium, non-removable head	7065
QD	Drum, aluminium, removable head	7065
QF	Drum, plastic, non-removable head	7065
QG	Drum, plastic, removable head	7065
QH	Barrel, wooden, bung type	7065
QJ	Barrel, wooden, removable head	7065
QK	Jerrican, steel, non-removable head	7065
QL	Jerrican, steel, removable head	7065
QM	Jerrican, plastic, non-removable head	7065
QN	Jerrican, plastic, removable head	7065
QP	Box, wooden, natural wood, ordinary	7065
QQ	Box, wooden, natural wood, with sift proof walls	7065
QR	Box, plastic, expanded	7065

COPYRIGHT VDA 2026

Applicable codes

Code	Name/description	Code list
QS	Box, plastic, solid	7065
RD	Rod	7065
RG	Ring	7065
RJ	Rack, clothing hanger	7065
RK	Rack	7065
RL	Reel	7065
RO	Roll	7065
RT	Rednet	7065
RZ	Rods, in bundle/bunch/truss	7065
SA	Sack	7065
SB	Slab	7065
SC	Crate, shallow	7065
SD	Spindle	7065
SE	Sea-chest	7065
SH	Sachet	7065
SI	Skid	7065
SK	Case, skeleton	7065
SL	Slipsheet	7065
SM	Sheetmetal	7065
SO	Spool	7065
SP	Sheet, plastic wrapping	7065
SS	Case, steel	7065
ST	Sheet	7065
SU	Suitcase	7065
SV	Envelope, steel	7065
SW	Shrinkwrapped	7065
SX	Set	7065
SY	Sleeve	7065
SZ	Sheets, in bundle/bunch/truss	7065
T1	Tablet	7065
TB	Tub	7065
TC	Tea-chest	7065
TD	Tube, collapsible	7065
TE	Tyre	7065
TG	Tank container, generic	7065
TI	Tierce TI	7065
TK	Tank, rectangular	7065
TL	Tub, with lid	7065
TN	Tin	7065
TO	Tun	7065
TR	Trunk	7065
TS	Truss	7065
TT	Bag, tote	7065
TU	Tube	7065
TV	Tube, with nozzle	7065
TW	Pallet, triwall	7065
TY	Tank, cylindrical	7065
TZ	Tubes, in bundle/bunch/truss	7065
UC	Uncaged	7065
UN	Unit	7065
VA	Vat	7065
VG	Bulk, gas (at 1031 mbar and 15 degree C)	7065
VI	Vial	7065
VK	Vanpack	7065
VL	Bulk, liquid	7065

COPYRIGHT VDA 2026

Applicable codes

Code	Name/description	Code list
VN	Vehicle	7065
VO	Bulk, solid, large particles ("nodules")	7065
VP	Vacuum-packed	7065
VQ	Bulk, liquefied gas (at abnormal temperature/pressure)	7065
VR	Bulk, solid, granular particles ("grains")	7065
VS	Bulk, scrap metal	7065
VY	Bulk, solid, fine particles ("powders")	7065
WA	Intermediate bulk container	7065
WB	Wickerbottle	7065
WC	Intermediate bulk container, steel	7065
WD	Intermediate bulk container, aluminium	7065
WF	Intermediate bulk container, metal	7065
WG	Intermediate bulk container, steel, pressurised > 10 kpa	7065
WH	Intermediate bulk container, aluminium, pressurised > 10 kpa	7065
WJ	Intermediate bulk container, metal, pressure 10 kpa	7065
WK	Intermediate bulk container, steel, liquid	7065
WL	Intermediate bulk container, aluminium, liquid	7065
WM	Intermediate bulk container, metal, liquid	7065
WN	Intermediate bulk container, woven plastic, without coat/liner	7065
WP	Intermediate bulk container, woven plastic, coated	7065
WQ	Intermediate bulk container, woven plastic, with liner	7065
WR	Intermediate bulk container, woven plastic, coated and liner	7065
WS	Intermediate bulk container, plastic film	7065
WT	Intermediate bulk container, textile with out coat/liner	7065
WU	Intermediate bulk container, natural wood, with inner liner	7065
WV	Intermediate bulk container, textile, coated	7065
WW	Intermediate bulk container, textile, with liner	7065
WX	Intermediate bulk container, textile, coated and liner	7065
WY	Intermediate bulk container, plywood, with inner liner	7065
WZ	Intermediate bulk container, reconstituted wood, with inner liner	7065
XA	Bag, woven plastic, without inner coat/liner	7065
XB	Bag, woven plastic, sift proof	7065
XC	Bag, woven plastic, water resistant	7065
XD	Bag, plastics film	7065
XF	Bag, textile, without inner coat/liner	7065
XG	Bag, textile, sift proof	7065
XH	Bag, textile, water resistant	7065
XJ	Bag, paper, multi-wall	7065
XK	Bag, paper, multi-wall, water resistant	7065
YA	Composite packaging, plastic receptacle in steel drum	7065
YB	Composite packaging, plastic receptacle in steel crate box	7065
YC	Composite packaging, plastic receptacle in aluminium drum	7065
YD	Composite packaging, plastic receptacle in aluminium crate	7065
YF	Composite packaging, plastic receptacle in wooden box	7065
YG	Composite packaging, plastic receptacle in plywood drum	7065
YH	Composite packaging, plastic receptacle in plywood box	7065
YJ	Composite packaging, plastic receptacle in fibre drum	7065
YK	Composite packaging, plastic receptacle in fibreboard box	7065
YL	Composite packaging, plastic receptacle in plastic drum	7065
YM	Composite packaging, plastic receptacle in solid plastic box	7065
YN	Composite packaging, glass receptacle in steel drum	7065
YP	Composite packaging, glass receptacle in steel crate box	7065
YQ	Composite packaging, glass receptacle in aluminium drum	7065
YR	Composite packaging, glass receptacle in aluminium crate	7065
YS	Composite packaging, glass receptacle in wooden box	7065

COPYRIGHT VDA 2026

Applicable codes

Code	Name/description	Code list
YT	Composite packaging, glass receptacle in plywood drum	7065
YV	Composite packaging, glass receptacle in wickerwork hamper	7065
YW	Composite packaging, glass receptacle in fibre drum	7065
YX	Composite packaging, glass receptacle in fibreboard box	7065
YY	Composite packaging, glass receptacle in expandable plastic pack	7065
YZ	Composite packaging, glass receptacle in solid plastic pack	7065
ZA	Intermediate bulk container, paper, multi-wall	7065
ZB	Bag, large	7065
ZC	Intermediate bulk container, paper, multi-wall, water resistant	7065
ZD	Intermediate bulk container, rigid plastic, with structural equipment, solids	7065
ZF	Intermediate bulk container, rigid plastic, freestanding, solids	7065
ZG	Intermediate bulk container, rigid plastic, with structural equipment, pressurised	7065
ZH	Intermediate bulk container, rigid plastic, freestanding, pressurised	7065
ZJ	Intermediate bulk container, rigid plastic, with structural equipment, liquids	7065
ZK	Intermediate bulk container, rigid plastic, freestanding, liquids	7065
ZL	Intermediate bulk container, composite, rigid plastic, solids	7065
ZM	Intermediate bulk container, composite, flexible plastic, solids	7065
ZN	Intermediate bulk container, composite, rigid plastic, pressurised	7065
ZP	Intermediate bulk container, composite, flexible plastic, pressurised	7065
ZQ	Intermediate bulk container, composite, rigid plastic, liquids	7065
ZR	Intermediate bulk container, composite, flexible plastic, liquids	7065
ZS	Intermediate bulk container, composite	7065
ZT	Intermediate bulk container, fibreboard	7065
ZU	Intermediate bulk container, flexible	7065
ZV	Intermediate bulk container, metal, other than steel	7065
ZW	Intermediate bulk container, natural wood	7065
ZX	Intermediate bulk container, plywood	7065
ZY	Intermediate bulk container, reconstituted wood	7065
ZZ	Mutually defined	7065

7075 Packaging level code

Code	Name/description	Code list
1	Inner	7075
2	Intermediate	7075
3	Outer	7075
4	No packaging hierarchy	7075

7077 Description format code

Code	Name/description	Code list
X	Semi-structured (code + text)	7077

7081 Item characteristic code

Code	Name/description	Code list
1	Certificate of conformity	7081
2	General product form	7081
3	Ship to stock	7081
4	Finish	7081
5	End use application	7081
6	Construction method	7081
7	Generic drug	7081
8	Product	7081
9	Sub-product	7081
10	Grain direction	7081
11	Customs specifications	7081
12	Type and/or process	7081
13	Quality	7081

COPYRIGHT VDA 2026

Applicable codes

Code	Name/description	Code list
14	Surface condition	7081
15	Heat treat/anneal	7081
16	Size system	7081
17	Coating	7081
18	Surface treatment, chemical	7081
19	Surface treatment, mechanical	7081
20	Transfer capacity type	7081
21	Forming	7081
22	Edge treatment	7081
23	Welds/splices	7081
24	Control item	7081
25	End treatment	7081
26	Ship to line	7081
27	Material description	7081
28	Test sample frequency	7081
29	Electricity exchange type	7081
30	Test sample direction	7081
31	European Community risk class	7081
32	Type of test/inspection	7081
33	Electricity production type	7081
34	Hydrological data	7081
35	Colour	7081
36	Electricity consumption type	7081
37	Weather data	7081
38	Grade	7081
39	Ancillary electricity service	7081
40	Active substance	7081
41	Dangerous goods proper shipping name	7081
42	Fanciful name	7081
43	Twist	7081
44	Further identifying characteristic	7081
45	Private label name	7081
46	Silhouette	7081
47	Warranty type description	7081
48	Yarn count	7081
49	Equipment	7081
50	Labour	7081
51	Labour overtime	7081
52	Labour double time	7081
53	Leased resource	7081
54	Section profile	7081
55	Registered name	7081
56	Special processing	7081
57	Trade name	7081
58	Winding instructions	7081
59	Surface protection	7081
60	Age	7081
61	New article	7081
62	Obsolete article	7081
63	Current article	7081
64	Revised design	7081
65	Reinstated article	7081
66	Current article spares	7081
67	Balance out article	7081
68	Initial sample	7081

COPYRIGHT VDA 2026

Applicable codes

Code	Name/description	Code list
69	Field test	7081
70	Revised article	7081
71	Refurbished article	7081
72	Vintage	7081
73	Beverage age	7081
74	Beverage brand	7081
75	Artist	7081
76	Author	7081
77	Binding	7081
78	Edition	7081
79	Other physical description	7081
80	Publisher	7081
81	Title	7081
82	Series title	7081
83	Volume title	7081
84	Composer	7081
85	Recording medium	7081
86	Music style	7081
87	Promotional event	7081
88	Promotional offer	7081
89	Alcohol beverage class	7081
90	Alcohol beverage type	7081
91	Secondary grape	7081
92	Primary grape	7081
93	Beverage category	7081
94	Beverage flavour	7081
95	Wine growing region	7081
96	Wine fruit	7081
97	Beverage container characteristics	7081
98	Size	7081
99	Cell line history	7081
100	Project subject	7081
101	Test panel type	7081
102	Anatomical origin of sample	7081
103	Type of sample	7081
104	Shelf-life code	7081
105	Limiting operation	7081
106	Temper	7081
107	Filament	7081
108	Denier	7081
109	Fibre	7081
110	Lustre	7081
111	Shade	7081
112	Tint	7081
113	Fibre tow	7081
114	Alloy	7081
115	Machine run	7081
116	Corrosion resistance	7081
117	Visual	7081
118	Electrical	7081
119	Functional performance	7081
120	Chemistry	7081
121	Physical	7081
122	Magnetic	7081
123	Mechanical	7081

COPYRIGHT VDA 2026

Applicable codes

Code	Name/description	Code list
124	Metallographic	7081
125	Dye lot	7081
126	Pattern	7081
127	Appearance	7081
128	Dispersion	7081
129	Fluid	7081
130	Flow	7081
131	Moisture	7081
132	Fabric	7081
133	Shipping unit component	7081
134	Manufacturing method	7081
135	Engine	7081
136	Transmission	7081
137	Controlled substance	7081
139	Collateral	7081
140	Chassis	7081
141	Compliance method	7081
142	Pipe coupling	7081
143	Drug efficacy	7081
144	Dosage form	7081
145	Dimensional	7081
146	Fold configuration	7081
147	Fuel	7081
148	Cell line identifier	7081
149	Hydraulics	7081
150	Coordinates	7081
151	Options	7081
152	Non-prescription drug	7081
153	Prescription drug	7081
154	Source	7081
155	Therapeutic class	7081
156	Therapeutic equivalency	7081
157	Filter	7081
158	Trim	7081
159	Waste	7081
160	Bottomhole location method	7081
161	Bottomhole pressure method	7081
162	Common chemical name	7081
163	Chemical family name	7081
164	Casing or liner type	7081
165	Well direction	7081
166	Electronic field	7081
167	Formula	7081
168	Ingredient	7081
169	Market segment	7081
170	Odour	7081
171	Physical form	7081
172	Well perforation continuity	7081
173	Well perforation interval	7081
174	Pipeline stream	7081
175	Surface location method	7081
176	Threshold	7081
177	Well classification	7081
178	Well test type	7081
179	Major grade	7081

COPYRIGHT VDA 2026

Applicable codes

Code	Name/description	Code list
180	Specification	7081
181	Test sample location - ends	7081
182	Product life cycle	7081
183	Storage and display	7081
184	Density	7081
185	Print orientation	7081
186	Solubility	7081
187	Material resource	7081
188	Other direct resource	7081
189	Subcontract resource	7081
190	Consumable resource	7081
191	Recurring resource	7081
192	Non recurring resource	7081
193	Presentation effect	7081
194	Font	7081
195	Key-word	7081
196	Additional sectorial characteristics	7081
197	Product data base management description	7081
198	Cell culture media	7081
199	Animal hybridoma	7081
200	Virus coexistence, serological	7081
201	Composition	7081
202	Vehicle body type	7081
203	Condition	7081
204	Convention on International Trade and Endangered Species (CITES) indicator	7081
205	DDTC military equipment indicator	7081
206	Driver side	7081
207	Engine power rating, administrative	7081
208	Enzyme source	7081
209	Gender	7081
210	Geographic isolate	7081
211	Intergeneric genetically modified	7081
212	Life stage	7081
213	Pathovar	7081
214	Preliminary assessment information rule	7081
215	Protected species	7081
216	Race	7081
217	Recombinant genetic insert	7081
218	Strain (microbiology)	7081
219	Style	7081
220	Seller assigned commodity name	7081
221	Model name	7081
222	Variety	7081
223	Brand name	7081
224	Item name, approved	7081
225	Item descriptive name, approved	7081
226	Common name	7081
227	Not for resale to consumer	7081
228	Year of production	7081
229	Frequency range	7081
230	Radio emission type	7081
231	Output impedance	7081
232	Radio modulation type	7081
233	Radio frequency output power	7081
234	Radiated Spurious Emission (RSE)	7081

COPYRIGHT VDA 2026

Applicable codes

Code	Name/description	Code list
235	Frequency stability	7081
236	Frequency deviation limiting ability	7081
237	Necessary radio bandwidth	7081
238	Spurious & Image Response Rejection (SIRR)	7081
239	Digital transmission rate	7081
240	Sensitivity	7081
241	Channel frequency spacing	7081
242	Antenna type	7081
243	Antenna gain	7081
244	Antenna frequency range	7081
245	Maximum power density	7081
246	Effective radiated power (ERP)	7081
247	Communication channel capacity	7081
248	Antenna polarization	7081
249	Scientific name	7081
ZZZ	Mutually defined	7081
7143	Item type identification code	
Code	Name/description	Code list
HS	Harmonised system	7143
IN	Buyer's item number	7143
SA	Supplier's article number	7143
7233	Packaging related description code	
Code	Name/description	Code list
35	Type of package	7233
37	Package protection	7233
7405	Object identification code qualifier	
Code	Name/description	Code list
AL	Kanban card identifier	7405
AW	Serial shipping container code	7405
BU	Package buyer assigned identifier	7405
ML	Marking/label number	7405
X01	Package identification, assigned by the logistics service provider	7405
7505	Unit or component type description code	
Code	Name/description	Code list
NO		
7511	Label identifier coded	
Code	Name/description	Code list
1J	Unique license plate number of a handling unit (THU or HU), which is lowest package level, packed with like items	JAI019
5J	Unique license plate number assigned to a transport handling unit with inner handling units, packed with unlike items.	JAI019
6J	Unique license plate number assigned to a transport handling unit with inner handling units, all packed with like items.	JAI019
8051	Transport stage code qualifier	
Code	Name/description	Code list
X01	Current transport leg	ODDC156(1)
12	At departure	8051
20	Main-carriage transport	8051
8053	Equipment type code qualifier	
Code	Name/description	Code list
X01	Trigger	ODDC090(1)

COPYRIGHT VDA 2026

Applicable codes

8067 Transport mode name code

Code	Name/description	Code list
10	Maritime transport	8067
20	Rail transport	8067
30	Road transport	8067
40	Air transport	8067
50	Mail	8067
60	Multimodal transport	8067
70	Fixed transport installations	8067
80	Inland water transport	8067

8179 Transport means description code

Code	Name/description	Code list
T01	Eurotrailer H 2.6, W 2.48, L 13.6 tarpauline or box	ODDC087(1)
T02	Megatrailer H 3.0, W 2.48, L 13.6 tarpauline or box	ODDC087(1)
T03	Jumbo swap body L 7.82, H 3.0, W 2.48 m	ODDC087(1)
T04	Jumbo trailer pull	ODDC087(1)
T05	7.5 ton	ODDC087(1)
T06	VAN / bus	ODDC087(1)
T07	Car	ODDC087(1)
T08	Aircraft	ODDC087(1)
T09	Ocean Vessel	ODDC087(1)
T10	Gigaliner	ODDC087(1)
T11	Tautliner	ODDC087(1)
T12	Railway wagon	ODDC087(1)
T13	Gooseneck Chassis	ODDC087(1)

8273 Dangerous goods regulations code

Code	Name/description	Code list
ADR	European agreement on the international carriage of dangerous goods on road (ADR)	8273
ADS	NDR European agreement for the transport of dangerous goods on the river Rhine	8273
ADT	CA, Transport Canada's dangerous goods requirements	8273
ADU	JP, Japanese maritime safety agency dangerous goods regulation code	8273
ADV	MARPOL 73/78	8273
ADW	GHS regulation	8273
ADX	Transport emergency (TREM) card	8273
ADY	IBC Code	8273
ADZ	IGC Code	8273
AEA	IMSBC Code	8273
AEB	MARPOL Annex I	8273
AGS	DE, ADR and GGVS combined regulations for combined transport	8273
ANR	ADNR, Autorisation de transport de matieres Dangereuses pour la Navigation sur le Rhin	8273
ARD	DE, ARD and RID - Combined regulations for combined transport	8273
CFR	US, 49 Code of federal regulations	8273
COM	DE, ADR, RID, GGVS and GGVE - Combined regulations for combined transport	8273
GVE	DE, GGVE (Gefahrgutverordnung Eisenbahn)	8273
GVS	DE, GGVS (Gefahrgutverordnung Strasse)	8273
ICA	IATA ICAO	8273
IMD	IMO IMDG code	8273
RGE	DE, RID and GGVE, Combined regulations for combined transport on rails	8273
RID	Railroad dangerous goods book (RID)	8273
UI	UK IMO book	8273
ZZZ	Mutually defined	8273

8335 Transport mode

COPYRIGHT VDA 2026

Applicable codes

Code	Name/description	Code list
X01	Full truck load - with separate tender	ODDC166(1)
X02	Full truck load - within the scope of area contract freight forwarder	ODDC166(1)
X03	Milk run during unloading - with separate tender, direct contract	ODDC166(1)
X04	Milk run during unloading - within the scope of area contract freight forwarder	ODDC166(1)
X05	Distribution by area contract freight forwarder	ODDC166(1)
X06	Milk run during loading - with separate tender, direct contract	ODDC166(1)
X07	Milk run during loading - within the scope of area contract freight forwarder	ODDC166(1)
X08	Milk run during loading and unloading - with separate tender, direct contract	ODDC166(1)
X09	Milk run during loading and unloading - within the scope of area contract freight forwarder	ODDC166(1)
X10	Full Truck Load - with separate tender transport leg ship-from to consolidation centre / cross-dock	ODDC166(1)
X11	Full Truck Load - with separate tender for transport leg cros-dock to cross-dock	ODDC166(1)
X12	Full Truck Load - with separate tender for transport leg cross-dock to ship-to	ODDC166(1)
X13	Full Container Load - with separate tender from ship-from to ship-to	ODDC166(1)
X14	Less than Full Container Load - with separate tender for transport leg from ship-from to consolidation centre / cross-dock	ODDC166(1)
X15	Less than Full Container Load - with separate tender for transport leg cross-dock to cross-dock	ODDC166(1)
X16	Less than Full Container Load - with separate tender for transport leg cross-dock to ship-to	ODDC166(1)
X17	Courier Express Parcel (CEP)	ODDC166(1)
X18	Special transport with frame contract	ODDC166(1)
X19	Special transport spot market	ODDC166(1)

8453 Transport means nationality code

Code	Name/description	Code list
AD	ANDORRA	8453
AE	UNITED ARAB EMIRATES	8453
AF	AFGHANISTAN	8453
AG	ANTIGUA AND BARBUDA	8453
AI	ANGUILLA	8453
AL	ALBANIA	8453
AM	ARMENIA	8453
AN	NETHERLANDS ANTILLES	8453
AO	ANGOLA	8453
AQ	ANTARCTICA	8453
AR	ARGENTINA	8453
AS	AMERICAN SAMOA	8453
AT	AUSTRIA	8453
AU	AUSTRALIA	8453
AW	ARUBA	8453
AX	ÅLAND ISLANDS	8453
AZ	AZERBAIJAN	8453
BA	BOSNIA AND HERZEGOVINA	8453
BB	BARBADOS	8453
BD	BANGLADESH	8453
BE	BELGIUM	8453
BF	BURKINA FASO	8453
BG	BULGARIA	8453
BH	BAHRAIN	8453
BI	BURUNDI	8453
BJ	BENIN	8453
BL	SAINT BARTHÉLEMY	8453
BM	BERMUDA	8453
BN	BRUNEI DARUSSALAM	8453
BO	BOLIVIA (PLURINATIONAL STATE OF)	8453

COPYRIGHT VDA 2026

Applicable codes

Code	Name/description	Code list
BQ	BONAIRE, SINT EUSTATIUS AND SABA	8453
BR	BRAZIL	8453
BS	BAHAMAS	8453
BT	BHUTAN	8453
BV	BOUVET ISLAND	8453
BW	BOTSWANA	8453
BY	BELARUS	8453
BZ	BELIZE	8453
CA	CANADA	8453
CC	COCOS (KEELING) ISLANDS	8453
CD	CONGO, DEMOCRATIC REPUBLIC OF THE	8453
CF	CENTRAL AFRICAN REPUBLIC	8453
CG	CONGO	8453
CH	SWITZERLAND	8453
CI	COTE D'IVOIRE	8453
CK	COOK ISLANDS	8453
CL	CHILE	8453
CM	CAMEROON	8453
CN	CHINA	8453
CO	COLOMBIA	8453
CR	COSTA RICA	8453
CS	SERBIA AND MONTENEGRO	8453
CU	CUBA	8453
CV	CAPE VERDE	8453
CW	CURAÇAO	8453
CX	CHRISTMAS ISLAND	8453
CY	CYPRUS	8453
CZ	CZECHIA	8453
DE	GERMANY	8453
DJ	DJIBOUTI	8453
DK	DENMARK	8453
DM	DOMINICA	8453
DO	DOMINICAN REPUBLIC	8453
DZ	ALGERIA	8453
EC	ECUADOR	8453
EE	ESTONIA	8453
EG	EGYPT	8453
EH	WESTERN SAHARA	8453
ER	ERITREA	8453
ES	SPAIN	8453
ET	ETHIOPIA	8453
FI	FINLAND	8453
FJ	FIJI	8453
FK	FALKLAND ISLANDS (MALVINAS)	8453
FM	MICRONESIA (FEDERATED STATES OF)	8453
FO	FAROE ISLANDS	8453
FR	FRANCE	8453
GA	GABON	8453
GB	UNITED KINGDOM OF GREAT BRITAIN AND NORTHERN IRELAND	8453
GD	GRENADA	8453
GE	GEORGIA	8453
GF	FRENCH GUIANA	8453
GG	GUERNSEY	8453
GH	GHANA	8453
GI	GIBRALTAR	8453

COPYRIGHT VDA 2026

Applicable codes

Code	Name/description	Code list
GL	GREENLAND	8453
GM	GAMBIA	8453
GN	GUINEA	8453
GP	GUADELOUPE	8453
GQ	EQUATORIAL GUINEA	8453
GR	GREECE	8453
GS	SOUTH GEORGIA AND THE SOUTH SANDWICH ISLANDS	8453
GT	GUATEMALA	8453
GU	GUAM	8453
GW	GUINEA-BISSAU	8453
GY	GUYANA	8453
HK	HONG KONG	8453
HM	HEARD ISLAND AND MCDONALD ISLANDS	8453
HN	HONDURAS	8453
HR	CROATIA	8453
HT	HAITI	8453
HU	HUNGARY	8453
ID	INDONESIA	8453
IE	IRELAND	8453
IL	ISRAEL	8453
IM	ISLE OF MAN	8453
IN	INDIA	8453
IO	BRITISH INDIAN OCEAN TERRITORY	8453
IQ	IRAQ	8453
IR	IRAN (ISLAMIC REPUBLIC OF)	8453
IS	ICELAND	8453
IT	ITALY	8453
JE	JERSEY	8453
JM	JAMAICA	8453
JO	JORDAN	8453
JP	JAPAN	8453
KE	KENYA	8453
KG	KYRGYZSTAN	8453
KH	CAMBODIA	8453
KI	KIRIBATI	8453
KM	COMOROS	8453
KN	SAINT KITTS AND NEVIS	8453
KP	KOREA (DEMOCRATIC PEOPLE'S REPUBLIC OF)	8453
KR	KOREA, REPUBLIC OF	8453
KW	KUWAIT	8453
KY	CAYMAN ISLANDS	8453
KZ	KAZAKHSTAN	8453
LA	LAO PEOPLE'S DEMOCRATIC REPUBLIC	8453
LB	LEBANON	8453
LC	SAINT LUCIA	8453
LI	LIECHTENSTEIN	8453
LK	SRI LANKA	8453
LR	LIBERIA	8453
LS	LESOTHO	8453
LT	LITHUANIA	8453
LU	LUXEMBOURG	8453
LV	LATVIA	8453
LY	LIBYA	8453
MA	MOROCCO	8453
MC	MONACO	8453

COPYRIGHT VDA 2026

Applicable codes

Code	Name/description	Code list
MD	MOLDOVA, REPUBLIC OF	8453
ME	MONTENEGRO	8453
MF	SAINT MARTIN (FRENCH PART)	8453
MG	MADAGASCAR	8453
MH	MARSHALL ISLANDS	8453
MK	MACEDONIA, THE FORMER YUGOSLAV REPUBLIC OF	8453
ML	MALI	8453
MM	MYANMAR	8453
MN	MONGOLIA	8453
MO	MACAO	8453
MP	NORTHERN MARIANA ISLANDS	8453
MQ	MARTINIQUE	8453
MR	MAURITANIA	8453
MS	MONTSERRAT	8453
MT	MALTA	8453
MU	MAURITIUS	8453
MV	MALDIVES	8453
MW	MALAWI	8453
MX	MEXICO	8453
MY	MALAYSIA	8453
MZ	MOZAMBIQUE	8453
NA	NAMIBIA	8453
NC	NEW CALEDONIA	8453
NE	NIGER	8453
NF	NORFOLK ISLAND	8453
NG	NIGERIA	8453
NI	NICARAGUA	8453
NL	NETHERLANDS	8453
NO	NORWAY	8453
NP	NEPAL	8453
NR	NAURU	8453
NU	NIUE	8453
NZ	NEW ZEALAND	8453
OM	OMAN	8453
PA	PANAMA	8453
PE	PERU	8453
PF	FRENCH POLYNESIA	8453
PG	PAPUA NEW GUINEA	8453
PH	PHILIPPINES	8453
PK	PAKISTAN	8453
PL	POLAND	8453
PM	SAINT PIERRE AND MIQUELON	8453
PN	PITCAIRN	8453
PR	PUERTO RICO	8453
PS	PALESTINE, STATE OF	8453
PT	PORTUGAL	8453
PW	PALAU	8453
PY	PARAGUAY	8453
QA	QATAR	8453
RE	REUNION	8453
RO	ROMANIA	8453
RS	SERBIA	8453
RU	RUSSIAN FEDERATION	8453
RW	RWANDA	8453
SA	SAUDI ARABIA	8453

COPYRIGHT VDA 2026

Applicable codes

Code	Name/description	Code list
SB	SOLOMON ISLANDS	8453
SC	SEYCHELLES	8453
SD	SUDAN	8453
SE	SWEDEN	8453
SG	SINGAPORE	8453
SH	SAINT HELENA, ASCENSION AND TRISTAN DA CUNHA	8453
SI	SLOVENIA	8453
SJ	SVALBARD AND JAN MAYEN	8453
SK	SLOVAKIA	8453
SL	SIERRA LEONE	8453
SM	SAN MARINO	8453
SN	SENEGAL	8453
SO	SOMALIA	8453
SR	SURINAME	8453
SS	SOUTH SUDAN	8453
ST	SAO TOME AND PRINCIPE	8453
SV	EL SALVADOR	8453
SX	SINT MAARTEN (DUTCH PART)	8453
SY	SYRIAN ARAB REPUBLIC	8453
SZ	SWAZILAND	8453
TC	TURKS AND CAICOS ISLANDS	8453
TD	CHAD	8453
TF	FRENCH SOUTHERN TERRITORIES	8453
TG	TOGO	8453
TH	THAILAND	8453
TJ	TAJIKISTAN	8453
TK	TOKELAU	8453
TL	TIMOR-LESTE	8453
TM	TURKMENISTAN	8453
TN	TUNISIA	8453
TO	TONGA	8453
TR	TURKEY	8453
TT	TRINIDAD AND TOBAGO	8453
TV	TUVALU	8453
TW	TAIWAN, PROVINCE OF CHINA	8453
TZ	TANZANIA, UNITED REPUBLIC OF	8453
UA	UKRAINE	8453
UG	UGANDA	8453
UM	UNITED STATES MINOR OUTLYING ISLANDS	8453
US	UNITED STATES OF AMERICA	8453
UY	URUGUAY	8453
UZ	UZBEKISTAN	8453
VA	HOLY SEE	8453
VC	SAINT VINCENT AND THE GRENADINES	8453
VE	VENEZUELA (BOLIVARIAN REPUBLIC OF)	8453
VG	VIRGIN ISLANDS, BRITISH	8453
VI	VIRGIN ISLANDS, U.S.	8453
VN	VIET NAM	8453
VU	VANUATU	8453
WF	WALLIS AND FUTUNA	8453
WS	SAMOA	8453
YE	YEMEN	8453
YT	MAYOTTE	8453
YU	YUGOSLAVIA	8453
ZA	SOUTH AFRICA	8453

COPYRIGHT VDA 2026

Applicable codes

Code	Name/description	Code list
ZM	ZAMBIA	8453
ZW	ZIMBABWE	8453

8457 Excess transportation reason code

Code	Name/description	Code list
ZZZ	Mutually defined	8457

8459 Excess transportation responsibility code

Code	Name/description	Code list
X	Responsibility to be determined	8459

9213 Duty regime type code

Code	Name/description	Code list
N	No, origin is not subject to preference	JAI010
Y	Yes, origin is subject to preference	JAI010

COPYRIGHT VDA 2026