VDA Verband der Automobilindustrie

Transport Order Confirmation

Recommendation VDA 4933 Part 3

Version 2.2, September 2026



Short Description

This recommendation describes the use of UN/EDIFACT message DESADV for transport order confirmation data in the supply chain of the automotive industry.

Disclaimer

The VDA Recommendations are recommendations that may be freely adopted by anyone. Users are responsible for correct implementation of the recommendations as required on a case-by-case basis.

The recommendations take into account the prevailing technology at the time of publication. Use of the VDA Recommendations does not absolve anyone from responsibility for his/her own actions, and all users act at their own risk. Liability of VDA and those involved in drafting of VDA Recommendations is excluded.

If you notice any errors, omissions or ambiguities in these recommendations, please contact VDA without delay so that these errors can be rectified.

Publisher	Verband der Automobilindustrie e.V. (VDA) Behrenstrasse 35, 10117 Berlin www.vda.de
	This recommendation was developed by AK SID together with an Odette project group.
Copyright	Verband der Automobilindustrie e.V. (VDA)
	Reprint, also in extracts, is only permitted, if the source is stated.
Version	Version 2.2, September 2026

COPYRIGHT VDA 2026

Table of contents

Table of contents 3
List of changes 4
Structure of an UN/EDIFACT interchange 15
Branching diagram 16
Message structure 26
Segment details 29
Applicable codes 132

COPYRIGHT VDA 2026

List of changes

No.	Change Change Request	Date	Version	Segment(-group) and data element
01	2018-009 Code 86 neu/new, Codes O91 und O92 gestrichen / deleted	2018-10-12	V1.2	56 SG2 NAD C082 3055 *SG2#7* Carrier The carrier is the business partner put in charge of the transportation of the goods by the freight forwarder
02	2022-09-16 Code SU gelöscht, da nur in 4933 T1 und T3 verwendet.	2022-09-16	3.1	46 SG2 NAD 3035 *SG2#5* Seller / Supplier Seller's name and address
03	2021-019 Format an..256 --> an..35	2022-01-20	3.0	56 SG2 NAD C059 3042 *SG2#7* Carrier The carrier is the business partner put in charge of the transportation of the goods by the freight forwarder
04	2021-019 Format an..256 --> an..35	2022-01-20	3.0	56 SG2 NAD C059 3042 *SG2#7* Carrier The carrier is the business partner put in charge of the transportation of the goods by the freight forwarder
05	2021-019 Format an..70 --> an..35	2022-01-20	3.0	56 SG2 NAD C080 3036 *SG2#7* Carrier The carrier is the business partner put in charge of the transportation of the goods by the freight forwarder
06	2021-019 Format an..70 --> an..35	2022-01-20	3.0	56 SG2 NAD C080 3036 *SG2#7* Carrier The carrier is the business partner put in charge of the transportation of the goods by the freight forwarder
07	2021-019 Format an..256 --> an..35	2022-01-20	3.0	50 SG2 NAD C059 3042 *SG2#6* Freight forwarder Freight forwarder's name and address
08	2021-019 Format an..256 --> an..35	2022-01-20	3.0	50 SG2 NAD C059 3042 *SG2#6* Freight forwarder Freight forwarder's name and address
09	2021-019 Format an..70 --> an..35	2022-01-20	3.0	50 SG2 NAD C080 3036 *SG2#6* Freight forwarder Freight forwarder's name and address
10	2021-019 Format an..70 --> an..35	2022-01-20	3.0	50 SG2 NAD C080 3036 *SG2#6* Freight forwarder Freight forwarder's name and address

COPYRIGHT VDA 2026

List of changes

No.	Change Change Request	Date	Version	Segment(-group) and data element
11	2021-019 Format an..256 --> an..35	2022-01-20	3.0	46 SG2 NAD C059 3042 *SG2#5* Seller / Supplier Seller's name and address
12	2021-019 Format an..256 --> an..35	2022-01-20	3.0	46 SG2 NAD C059 3042 *SG2#5* Seller / Supplier Seller's name and address
13	2021-019 Format an..70 --> an..35	2022-01-20	3.0	46 SG2 NAD C080 3036 *SG2#5* Seller / Supplier Seller's name and address
14	2021-019 Format an..256 --> an..35	2022-01-20	3.0	43 SG2 NAD C059 3042 *SG2#4* Ultimate Customer Party Ultimate customers's name and address
15	2021-019 Format an..256 --> an..35	2022-01-20	3.0	43 SG2 NAD C059 3042 *SG2#4* Ultimate Customer Party Ultimate customers's name and address
16	2021-019 Format an..70 --> an..35	2022-01-20	3.0	43 SG2 NAD C080 3036 *SG2#4* Ultimate Customer Party Ultimate customers's name and address
17	2021-019 Format an..70 --> an..35	2022-01-20	3.0	43 SG2 NAD C080 3036 *SG2#4* Ultimate Customer Party Ultimate customers's name and address
18	2021-019 Format an..256 --> an..35	2022-01-20	3.0	39 SG2 NAD C059 3042 *SG2#3* Buyer Buyer's name and address
19	2021-019 Format an..256 --> an..35	2022-01-20	3.0	39 SG2 NAD C059 3042 *SG2#3* Buyer Buyer's name and address
20	2021-019 Format an..70 --> an..35	2022-01-20	3.0	39 SG2 NAD C080 3036 *SG2#3* Buyer Buyer's name and address
21	2021-019 Format an..70 --> an..35	2022-01-20	3.0	39 SG2 NAD C080 3036 *SG2#3* Buyer Buyer's name and address
22	2021-019 Format an..256 --> an..35	2022-01-20	3.0	32 SG2 NAD C059 3042 *SG2#2* Ship to ShipTo's name and address

COPYRIGHT VDA 2026

List of changes

No.	Change Change Request	Date	Version	Segment(-group) and data element
23	2021-019 Format an..256 --> an..35	2022-01-20	3.0	32 SG2 NAD C059 3042 *SG2#2* Ship to ShipTo's name and address
24	2021-019 Format an..70 --> an..35	2022-01-20	3.0	32 SG2 NAD C080 3036 *SG2#2* Ship to ShipTo's name and address
25	2021-019 Format an..70 --> an..35	2022-01-20	3.0	32 SG2 NAD C080 3036 *SG2#2* Ship to ShipTo's name and address
26	2021-019 Format an..256 --> an..35	2022-01-20	3.0	22 SG2 NAD C059 3042 *SG2#1* Ship from Ship from
27	2021-019 Format an..256 --> an..35	2022-01-20	3.0	22 SG2 NAD C059 3042 *SG2#1* Ship from Ship from
28	2021-019 Format an..70 --> an..35	2022-01-20	3.0	22 SG2 NAD C080 3036 *SG2#1* Ship from Ship from
29	2021-019 Format an..70 --> an..35	2022-01-20	3.0	04 BGM C106 1004 Beginning of message
30	2021-018 Anpassung an S3 konformen Profil der EDIFACT S4 (ISO 9735 Part 11). / Adaptation to S3 compliant profile of EDIFACT S4 (ISO 9735 Part 11).	2022-01-20	3.0	
31	2026-003 RFF+VA added.	2026-10-30	2.2	66 SG3 RFF *SG2#8\SG3#3* VAT registration number VAT registration number
32	2026-003 RFF+FC added.	2026-10-30	2.2	65 SG3 RFF *SG2#8\SG3#2* Fiscal number Fiscal number
33	2026-003 RFF+VA added.	2026-10-30	2.2	59 SG3 RFF *SG2#7\SG3#3* VAT registration number VAT registration number
34	2026-003 RFF+FC added.	2026-10-30	2.2	58 SG3 RFF *SG2#7\SG3#2* Fiscal number Fiscal number

COPYRIGHT VDA 2026

List of changes

No.	Change Change Request	Date	Version	Segment(-group) and data element
35	2026-003 RFF+VA added.	2026-10-30	2.2	53 SG3 RFF *SG2#6\SG3#3* VAT registration number VAT registration number
36	2026-003 RFF+FC added.	2026-10-30	2.2	52 SG3 RFF *SG2#6\SG3#2* Fiscal number Fiscal number
37	2026-003 RFF+VA added.	2026-10-30	2.2	49 SG3 RFF *SG2#5\SG3#3* VAT registration number VAT registration number
38	2026-003 RFF+FC added.	2026-10-30	2.2	48 SG3 RFF *SG2#5\SG3#2* Fiscal number Fiscal number
39	2026-003 RFF+VA added.	2026-10-30	2.2	45 SG3 RFF *SG2#4\SG3#2* VAT registration number VAT registration number
40	2026-003 RFF+FC added.	2026-10-30	2.2	44 SG3 RFF *SG2#4\SG3#1* Fiscal number Fiscal number
41	2026-003 RFF+VA added.	2026-10-30	2.2	42 SG3 RFF *SG2#3\SG3#3* VAT registration number VAT registration number
42	2026-003 RFF+FC added.	2026-10-30	2.2	41 SG3 RFF *SG2#3\SG3#2* Fiscal number Fiscal number
43	2026-003 RFF+VA added.	2026-10-30	2.2	38 SG3 RFF *SG2#2\SG3#4* VAT registration number VAT registration number
44	2026-003 RFF+FC added.	2026-10-30	2.2	37 SG3 RFF *SG2#2\SG3#3* Fiscal number Fiscal number
45	2026-003 RFF+VA added.	2026-10-30	2.2	27 SG3 RFF *SG2#1\SG3#4* VAT registration number VAT registration number
46	2026-003 RFF+FC added.	2026-10-30	2.2	26 SG3 RFF *SG2#1\SG3#3* Fiscal number Fiscal number
47	2026-003 GAVL21 --> GAVL22	2026-10-30	2.2	03 UNH S009 0057 Message header

COPYRIGHT VDA 2026

List of changes

No.	Change Change Request	Date	Version	Segment(-group) and data element
48	2025-009 Status C --> R	2025-09-12	2.1	77 SG12 MEA C502 6313 *SG11#1\SG12#1* Handling unit group details Length
49	2025-009 Status C --> R	2025-09-12	2.1	77 SG12 MEA C502 *SG11#1\SG12#1* Handling unit group details Length
50	2025-009 Status C --> O	2025-09-12	2.1	69 SG6 TDT 8028 *SG6#1* Means of transport Transport information
51	2025-009 Status C --> R	2025-09-12	2.1	67 SG5 TOD 4055 *SG5#1* Carrier arrives with empty packages indicator Trigger segment
52	2025-009 Status C --> R	2025-09-12	2.1	32 SG2 NAD C819 3229 *SG2#2* Ship to ShipTo's name and address
53	2023-009 Gelöscht / Deleted: Code specifying the unit of measurement, use UN/ECE Rec. 20 / Maßeinheit, codiert gem. UN/ECE Rec. 20	2025-09-10	2.1	83 SG12 MEA C174 6411 *SG11#1\SG12#1* Handling unit group details Gross weight
54	Korrektur Status C --> R	2025-09-10	2.1	83 SG12 MEA C174 6411 *SG11#1\SG12#1* Handling unit group details Gross weight
55	2023-009 Gelöscht / Deleted: Code specifying the unit of measurement, use UN/ECE Rec. 20 / Maßeinheit, codiert gem. UN/ECE Rec. 20	2025-09-10	2.1	82 SG12 MEA C174 6411 *SG11#1\SG12#1* Handling unit group details Maximum stackability for transport purposes
56	Korrektur Status C --> R	2025-09-10	2.1	82 SG12 MEA C174 6411 *SG11#1\SG12#1* Handling unit group details Maximum stackability for transport purposes
57	2023-009 Gelöscht / Deleted: Code specifying the unit of measurement, use UN/ECE Rec. 20 / Maßeinheit, codiert gem. UN/ECE Rec. 20	2025-09-10	2.1	81 SG12 MEA C174 6411 *SG11#1\SG12#1* Handling unit group details Maximum stacking weight
58	Korrektur Status C --> R	2025-09-10	2.1	81 SG12 MEA C174 6411 *SG11#1\SG12#1* Handling unit group details Maximum stacking weight
59	2023-009 Gelöscht / Deleted: Code specifying the unit of measurement, use UN/ECE Rec. 20 / Maßeinheit, codiert gem. UN/ECE Rec. 20	2025-09-10	2.1	80 SG12 MEA C174 6411 *SG11#1\SG12#1* Handling unit group details Volume

COPYRIGHT VDA 2026

List of changes

No.	Change Change Request	Date	Version	Segment(-group) and data element
60	Korrektur Status C --> R	2025-09-10	2.1	79 SG12 MEA C174 6411 *SG11#1\SG12#1* Handling unit group details Height
61	2023-009 Gelöscht / Deleted: Code specifying the unit of measurement, use UN/ECE Rec. 20 / Maßeinheit, codiert gem. UN/ECE Rec. 20	2025-09-10	2.1	78 SG12 MEA C174 6411 *SG11#1\SG12#1* Handling unit group details Width
62	Korrektur Status C --> R	2025-09-10	2.1	78 SG12 MEA C174 6411 *SG11#1\SG12#1* Handling unit group details Width
63	2023-009 Gelöscht / Deleted: Code specifying the unit of measurement, use UN/ECE Rec. 20 / Maßeinheit, codiert gem. UN/ECE Rec. 20	2025-09-10	2.1	77 SG12 MEA C174 6411 *SG11#1\SG12#1* Handling unit group details Length
64	Korrektur Status C --> R	2025-09-10	2.1	77 SG12 MEA C174 6411 *SG11#1\SG12#1* Handling unit group details Length
65	Korrektur Status C --> R	2025-09-10	2.1	73 SG8 MEA C174 6411 *SG8#1* Equipment Net volume
66	Korrektur Status C --> R	2025-09-10	2.1	72 SG8 MEA C174 6411 *SG8#1* Equipment Length / width / height
67	Korrektur Status C --> R	2025-09-10	2.1	12 MEA C174 6411 Number of handling units in shipment
68	2023-009 Gelöscht / Deleted: Code specifying the unit of measurement, use UN/ECE Rec. 20 / Maßeinheit, codiert gem. UN/ECE Rec. 20	2025-09-10	2.1	11 MEA C174 6411 Consignment's loading meters
69	Korrektur Status C --> R	2025-09-10	2.1	11 MEA C174 6411 Consignment's loading meters
70	2023-009 Gelöscht / Deleted: Code specifying the unit of measurement, use UN/ECE Rec. 20 / Maßeinheit, codiert gem. UN/ECE Rec. 20	2025-09-10	2.1	10 MEA C174 6411 Consignment volume (Total cube)
71	Korrektur Status C --> R	2025-09-10	2.1	10 MEA C174 6411 Consignment volume (Total cube)
72	2023-009 Gelöscht / Deleted: Code specifying the unit of measurement, use UN/ECE Rec. 20 / Maßeinheit, codiert gem. UN/ECE Rec. 20	2025-09-10	2.1	09 MEA C174 6411 Consignment's net weight

COPYRIGHT VDA 2026

List of changes

No.	Change Change Request	Date	Version	Segment(-group) and data element
73	Korrektur Status C --> R	2025-09-10	2.1	09 MEA C174 6411 Consignment's net weight
74	2023-009 Gelöscht / Deleted: Code specifying the unit of measurement, use UN/ECE Rec. 20 / Maßeinheit, codiert gem. UN/ECE Rec. 20	2025-09-10	2.1	08 MEA C174 6411 Consignment's gross weight
75	Korrektur Status C --> R	2025-09-10	2.1	08 MEA C174 6411 Consignment's gross weight
76	2023-013 Codes added: 7, 8, 9.	2025-04-25	2.1	69 SG6 TDT C003 7041 *SG6#1* Means of transport Transport information
77	2025-003 Segment RFF+PE hinzugefügt.	2025-04-25	2.1	36 SG3 RFF *SG2#2\SG3#2* Additional party ID - plant number Additional party ID - plant number
78	2025-003 Segment RFF+PE hinzugefügt.	2025-04-25	2.1	25 SG3 RFF *SG2#1\SG3#2* Additional party ID - plant number Additional party ID - plant number
79	2025-005 Code 721 added.	2025-04-25	2.1	07 DTM C507 2379 Requested shipment or delivery date
80	2025-005 Code 205 added.	2025-04-25	2.1	07 DTM C507 2379 Requested shipment or delivery date
81	2025-005 Code 721 added.	2025-04-25	2.1	06 DTM C507 2379 Confirmed delivery or pick-up date/time
82	2025-005 Code 205 added.	2025-04-25	2.1	05 DTM C507 2379 Message date
83	Beschluß des VDA AK SID 2025-03 GAVL20 --> GAVL21	2025-04-25	2.1	03 UNH S009 0057 Message header
84	2025-004 Hinzugefügt: C553	2025-04-18	2.1	63 SG2 LOC C553 *SG2#8* A party in charge of groupage. Place of transshipment
85	2025-004 Hinzugefügt: C553	2025-04-18	2.1	34 SG2 LOC C553 *SG2#2* Ship to Place of transshipment
86	2025-004 Hinzugefügt: C553	2025-04-18	2.1	33 SG2 LOC C553 *SG2#2* Ship to Place of discharge

COPYRIGHT VDA 2026 Generated by GEFEG.FX

List of changes

No.	Change Change Request	Date	Version	Segment(-group) and data element
87	2025-004 Hinzugefügt: C553	2025-04-18	2.1	23 SG2 LOC C553 *SG2#1* Ship from Shipping location/ Place of loading
88	2021-018 Anpassung an S3 konformen Profil der EDIFACT S4 (ISO 9735 Part 11). / Adaptation to S3 compliant profile of EDIFACT S4 (ISO 9735 Part 11).	2022-01-20	2.0	88 UNZ Interchange trailer
89	2021-018 Anpassung an S3 konformen Profil der EDIFACT S4 (ISO 9735 Part 11). / Adaptation to S3 compliant profile of EDIFACT S4 (ISO 9735 Part 11).	2022-01-20	2.0	87 UNT Message trailer
90	2021-018 GAVL15 --> GAVL20	2022-01-20	2.0	03 UNH S009 0057 Message header
91	2021-018 Anpassung an S3 konformen Profil der EDIFACT S4 (ISO 9735 Part 11). / Adaptation to S3 compliant profile of EDIFACT S4 (ISO 9735 Part 11).	2022-01-20	2.0	03 UNH Message header
92	2021-018 Anpassung an S3 konformen Profil der EDIFACT S4 (ISO 9735 Part 11). / Adaptation to S3 compliant profile of EDIFACT S4 (ISO 9735 Part 11).	2022-01-20	2.0	02 UNB Interchange header
93	2021-018 Anpassung an S3 konformen Profil der EDIFACT S4 (ISO 9735 Part 11). / Adaptation to S3 compliant profile of EDIFACT S4 (ISO 9735 Part 11).	2022-01-20	2.0	01 UNA Service string advice
94	2021-008 Neue / new SG: Subset ID	2021-07-07	2.0	21 SG1 RFF *SG1#9* Subset ID Subset ID
95	2021-011 Neue/new DE 8335	2021-07-06	1.5	70 SG6 TMD C219 8335 *SG6#1* Means of transport Transport movement type and loading sequence
96	2021-011 Neue/new C290	2021-07-06	1.5	69 SG6 TDT C290 *SG6#1* Means of transport Transport information
97	2021-011 Neue/new code X01	2021-07-06	1.5	69 SG6 TDT 8051 *SG6#1* Means of transport Transport information

COPYRIGHT VDA 2026 Generated by GEFEG.FX

List of changes

No.	Change Change Request	Date	Version	Segment(-group) and data element
98	Beschluß des VDA AK SID GAVL14 --> GAVL15	2021-06-30	1.5	03 UNH S009 0057 Message header
99	2020-037 Neu/New: 7041 Antriebsart/Power type	2020-12-07	1.4	69 SG6 TDT C003 7041 *SG6#1* Means of transport Transport information
100	Beschluß des VDA AK SID GAVL13 --> GAVL14	2020-12-04	1.4	03 UNH S009 0057 Message header
101	2020-037 07A --> 20B	2020-12-04	1.4	03 UNH S009 0054 Message header
102	2019-030 Neu/new	2019-12-31	1.3	64 SG3 RFF *SG2#8\SG3#1* Additional Party ID (DUNS) Reference
103	2019-030 Neu/new	2019-12-31	1.3	63 SG2 LOC *SG2#8* A party in charge of groupage. Place of transshipment
104	2019-030 Neu/new	2019-12-31	1.3	62 SG2 NAD *SG2#8* A party in charge of groupage. A party in charge of groupage.
105	Beschluß des VDA AK SID GAVL12 --> GAVL13	2019-12-31	1.3	03 UNH S009 0057 Message header
106	2019-017 Neues Segment GIN+X01 zur Angabe der Packstückidentifikation, vergeben vom Logistikdienstleister	2019-09-19	1.3	86 SG16 GIN *SG11#1\SG12#1\SG14#1\SG16#2* Package identification, assigned by the logistics service provider Package identification, assigned by the logistics service provider
107	2018-005 MaxRep 10 --> 1	2018-12-18	1.2	SG8 Equipment
108	2018-014 Status R -> D	2018-12-18	1.2	06 DTM Confirmed delivery or pick-up date/time
109	2018-014 Kommentar zu Code 1 und 5 ergänzt / Comment amended	2018-12-18	1.2	04 BGM 1225 Beginning of message
110	Datenelement & Remark hinzugefügt.	2018-12-13	1.2	71 SG8 EQD C224 8154 *SG8#1* Equipment Equipment details

COPYRIGHT VDA 2026 Generated by GEFEG.FX

List of changes

No.	Change Change Request	Date	Version	Segment(-group) and data element
111	2018-012 neues Segment / new segment	2018-11-27	1.2	SG1 Reference number of the transport order confirmation
112	2018-005 Neu / new	2018-10-08	1.2	SG8 Equipment
113	2018-004 Neu/new	2018-10-08	1.2	SG2 Carrier
114	2018-007 neuses Segment / new segment	2018-09-30	1.2	73 SG8 MEA *SG8#1* Equipment Net volume
115	2018-007 zusätzliche Maßeinheiten / additional measure units	2018-09-30	1.2	72 SG8 MEA C174 6411 *SG8#1* Equipment Length / width / height
116	2018-001-VDA Neu / new /enabled	2018-06-28	1.1	69 SG6 TDT C001 8179 *SG6#1* Means of transport Transport information
117	2018-001-VDA Neu/new	2018-06-28	1.1	20 SG1 RFF C506 1153 *SG1#8* Customs declaration reference number Reference number of the customs declaration
118	2018-002 Neu / new	2018-06-13	1.1	SG5 Carrier arrives with empty packages indicator
119	2018-003 Neue Segmentgruppe / new segment group	2018-05-30	1.1	SG14 List of individual handling units
120	2018-001-VDA Status D -> R	2018-05	1.1	SG16 Individual handling unit's transport label number
121	2018-001-VDA Qualifier ersetzt durch AVU und FF / qualifier replaced by AVU and FF	2018-001-VDA	1.1	18 SG1 RFF C506 1153 *SG1#6* Reference number of the shipment Reference number of the shipment assigned by the carrier (e.g., UPS / DHL / DPD number, etc.)
122	Format präzisiert / format refined	2017-10-20	1.1	85 SG16 GIN C208 7402 *SG11#1\SG12#1\SG14#1\SG16#1* Individual handling unit's transport label number Individual handling unit's transport label number
123	Webmeeting zum Sendungssplit Neues Segment MEA+AAZ+AAB.	2017-10-18	1.1	83 SG12 MEA *SG11#1\SG12#1* Handling unit group details Gross weight
124	MEA+ABU hinzugefügt.	2017-10-18	1.1	82 SG12 MEA *SG11#1\SG12#1* Handling unit group details Maximum stackability for transport purposes

COPYRIGHT VDA 2026

List of changes

No.	Change Change Request	Date	Version	Segment(-group) and data element
125	Webmeeting zum Sendungssplit Neues Segment MEA+ABR+AFE.	2017-10-18	1.1	81 SG12 MEA *SG11#1\SG12#1* Handling unit group details Maximum stacking weight
126	Webmeeting zum Sendungssplit Neues Segment MEA+AAZ+ABJ.	2017-10-18	1.1	80 SG12 MEA *SG11#1\SG12#1* Handling unit group details Volume
127	Webmeeting zum Sendungssplit Neues Segment MEA+AAZ+HT.	2017-10-18	1.1	79 SG12 MEA *SG11#1\SG12#1* Handling unit group details Height
128	Webmeeting zum Sendungssplit Neues Segment MEA+AAZ+WD.	2017-10-18	1.1	78 SG12 MEA *SG11#1\SG12#1* Handling unit group details Width
129	Webmeeting zum Sendungssplit Neues Segment MEA+AAZ+LN.	2017-10-18	1.1	77 SG12 MEA *SG11#1\SG12#1* Handling unit group details Length
130	Webmeeting zum Sendungssplit Neue Segmentgruppe SG-CPS	2017-10-18	1.1	76 SG12 PAC *SG11#1\SG12#1* Handling unit group details Package
131	Webmeeting zum Sendungssplit Neue Segmentgruppe SG-CPS	2017-10-18	1.1	75 SG11 CPS *SG11#1* Despatch control line / List of handling unit groups Despatch control line / List of handling unit groups
132	Neues Segment TMD	2017-10-18	1.1	70 SG6 TMD *SG6#1* Means of transport Transport movement type and loading sequence
133	Initiale Version	2017-04	1.0	

COPYRIGHT VDA 2026

Structure of an UN/EDIFACT interchange

An EDIFACT interchange file contains an interchange frame (UNB-UNZ) with one or more messages (UNH-UNT). The interchange frame can be preceded by a service string advice to define the used separator characters (recommended).

Usually one interchange file contains only messages of the same type, e.g. DESADV

For more information, please refer to recommendation VDA 4900.

Status	Segment		Description
Optional	UNA		Service String Advice
Mandatory	UNB		Interchange header
Mandatory		UNH	1. Message header
		...	Message segments
Mandatory		UNT	1. Message trailer
		UNH	2. Message header
		...	Message segments
		UNT	2. Message trailer
		etc.	
		UNH	n. Message header
		...	Message segments
		UNT	n. Message trailer
Mandatory	UNZ		Interchange trailer

COPYRIGHT VDA 2026

Branchingdiagramm

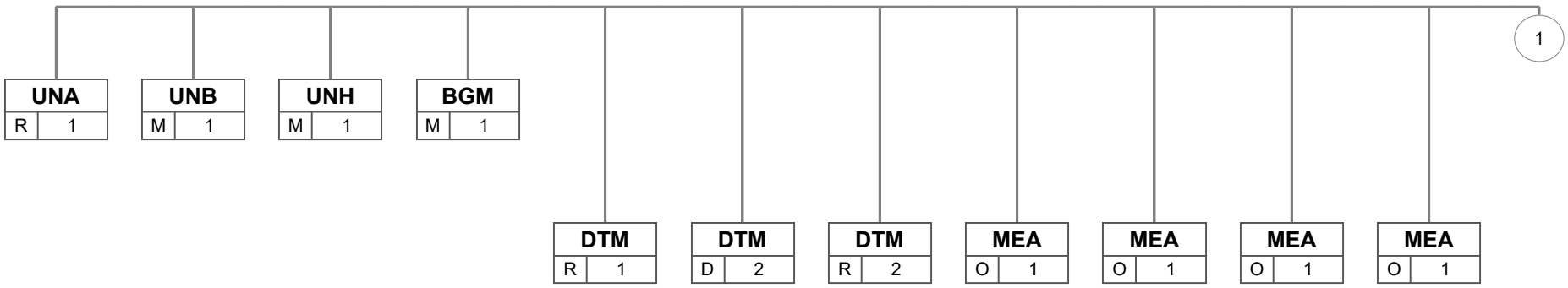

Die schwarzen Segmente/Gruppen werden genutzt, die grauen Segmente/Gruppen sind im Nachrichtentyp enthalten, werden aber nicht genutzt.

Bez
St MaxWdh

Bez = Segment-/Gruppen-Bezeichner, MaxWdh = Maximale Wiederholung der Segmente/Gruppen
St = Status (M=Muss/Mandatory, C=Conditional, R=Erforderlich/Required, O=Optional, D=Abhängig von/Dependent, A=Empfohlen/Advised)

COPYRIGHT VDA 2026

Branchingdiagramm

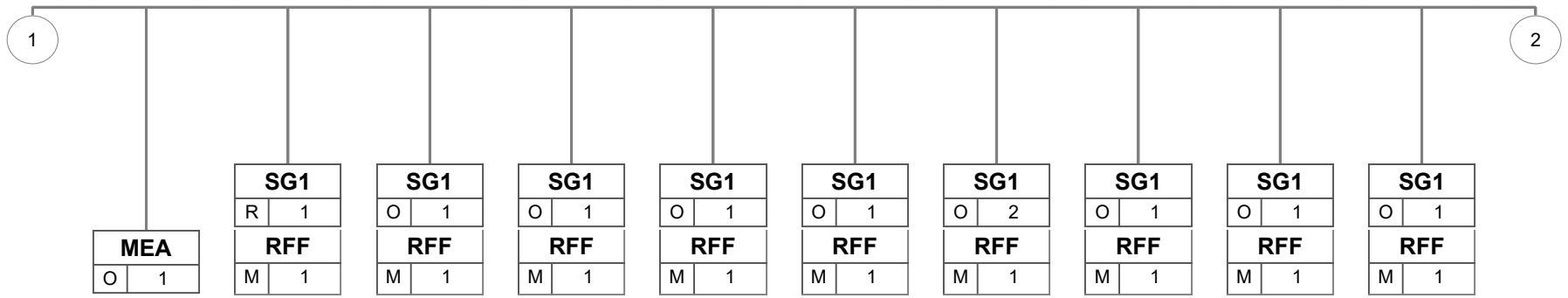

Die schwarzen Segmente/Gruppen werden genutzt, die grauen Segmente/Gruppen sind im Nachrichtentyp enthalten, werden aber nicht genutzt.

Bez
St MaxWdh

Bez = Segment-/Gruppen-Bezeichner, MaxWdh = Maximale Wiederholung der Segmente/Gruppen
St = Status (M=Muss/Mandatory, C=Conditional, R=Erforderlich/Required, O=Optional, D=Abhängig von/Dependent, A=Empfohlen/Advised)

COPYRIGHT VDA 2026

Branchingdiagramm

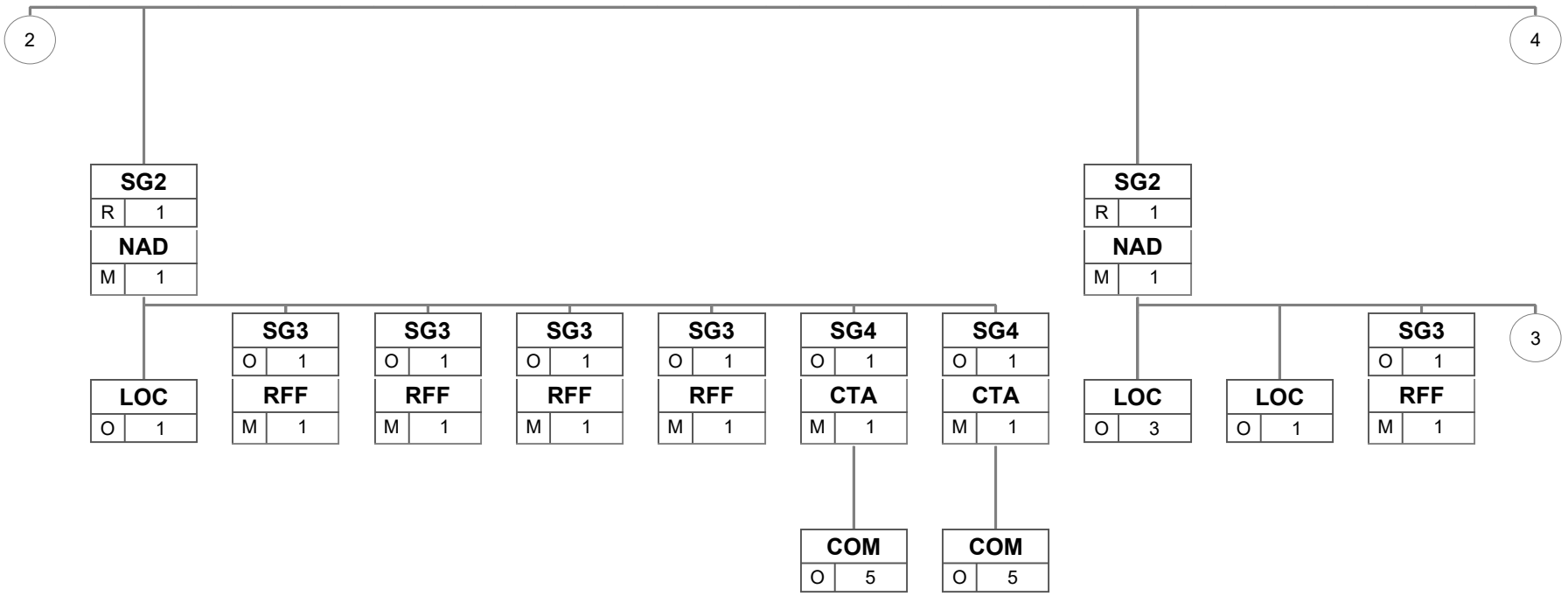

Die schwarzen Segmente/Gruppen werden genutzt, die grauen Segmente/Gruppen sind im Nachrichtentyp enthalten, werden aber nicht genutzt.

Bez
St MaxWdh

Bez = Segment-/Gruppen-Bezeichner, MaxWdh = Maximale Wiederholung der Segmente/Gruppen
St = Status (M=Muss/Mandatory, C=Conditional, R=Erforderlich/Required, O=Optional, D=Abhängig von/Dependent, A=Empfohlen/Advised)

COPYRIGHT VDA 2026

Branchingdiagramm

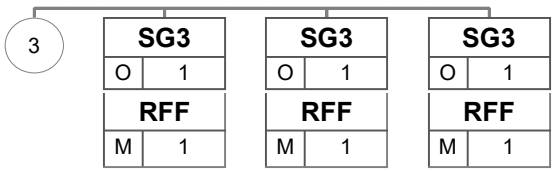

Die schwarzen Segmente/Gruppen werden genutzt, die grauen Segmente/Gruppen sind im Nachrichtentyp enthalten, werden aber nicht genutzt.

Bez	
St	MaxWdh

Bez = Segment-/Gruppen-Bezeichner, MaxWdh = Maximale Wiederholung der Segmente/Gruppen
St = Status (M=Muss/Mandatory, C=Conditional, R=Erforderlich/Required, O=Optional, D=Abhängig von/Dependent, A=Empfohlen/Advised)

COPYRIGHT VDA 2026

Branchingdiagramm

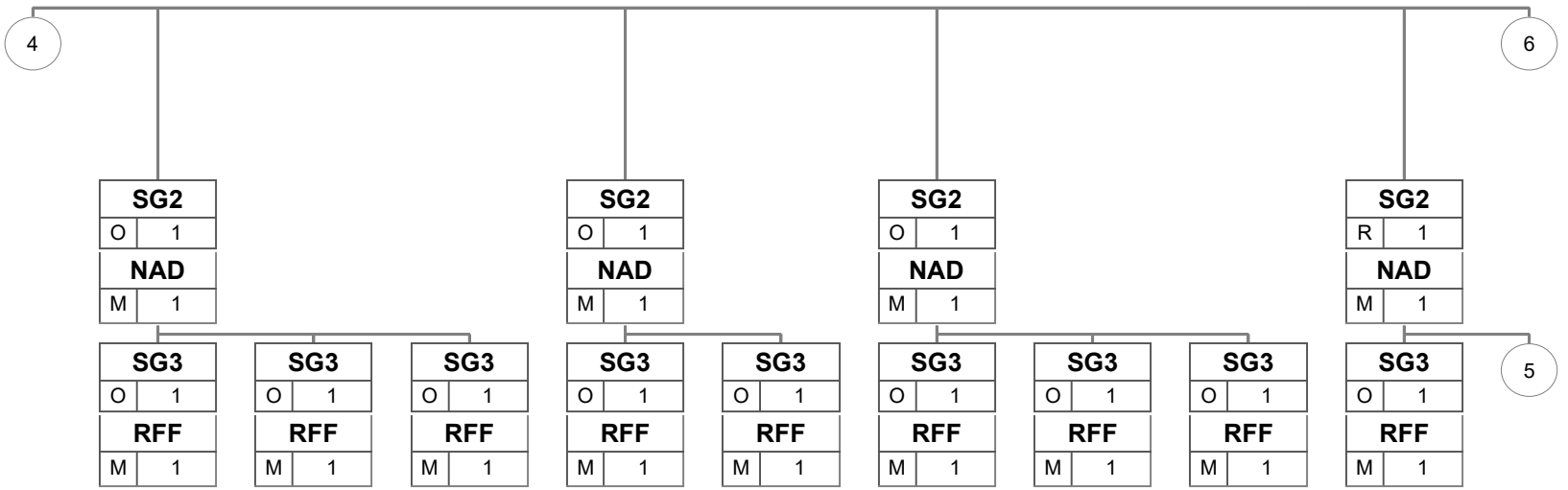

Die schwarzen Segmente/Gruppen werden genutzt, die grauen Segmente/Gruppen sind im Nachrichtentyp enthalten, werden aber nicht genutzt.

Bez
St MaxWdh

Bez = Segment-/Gruppen-Bezeichner, MaxWdh = Maximale Wiederholung der Segmente/Gruppen
St = Status (M=Muss/Mandatory, C=Conditional, R=Erforderlich/Required, O=Optional, D=Abhängig von/Dependent, A=Empfohlen/Advised)

COPYRIGHT VDA 2026

Branchingdiagramm

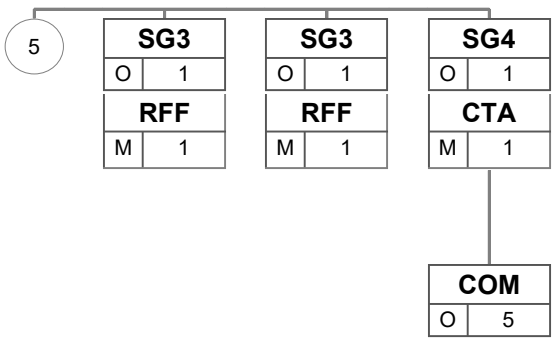

Die schwarzen Segmente/Gruppen werden genutzt, die grauen Segmente/Gruppen sind im Nachrichtentyp enthalten, werden aber nicht genutzt.

Bez
St MaxWdh

Bez = Segment-/Gruppen-Bezeichner, MaxWdh = Maximale Wiederholung der Segmente/Gruppen
St = Status (M=Muss/Mandatory, C=Conditional, R=Erforderlich/Required, O=Optional, D=Abhängig von/Dependent, A=Empfohlen/Advised)

COPYRIGHT VDA 2026

Branchingdiagramm

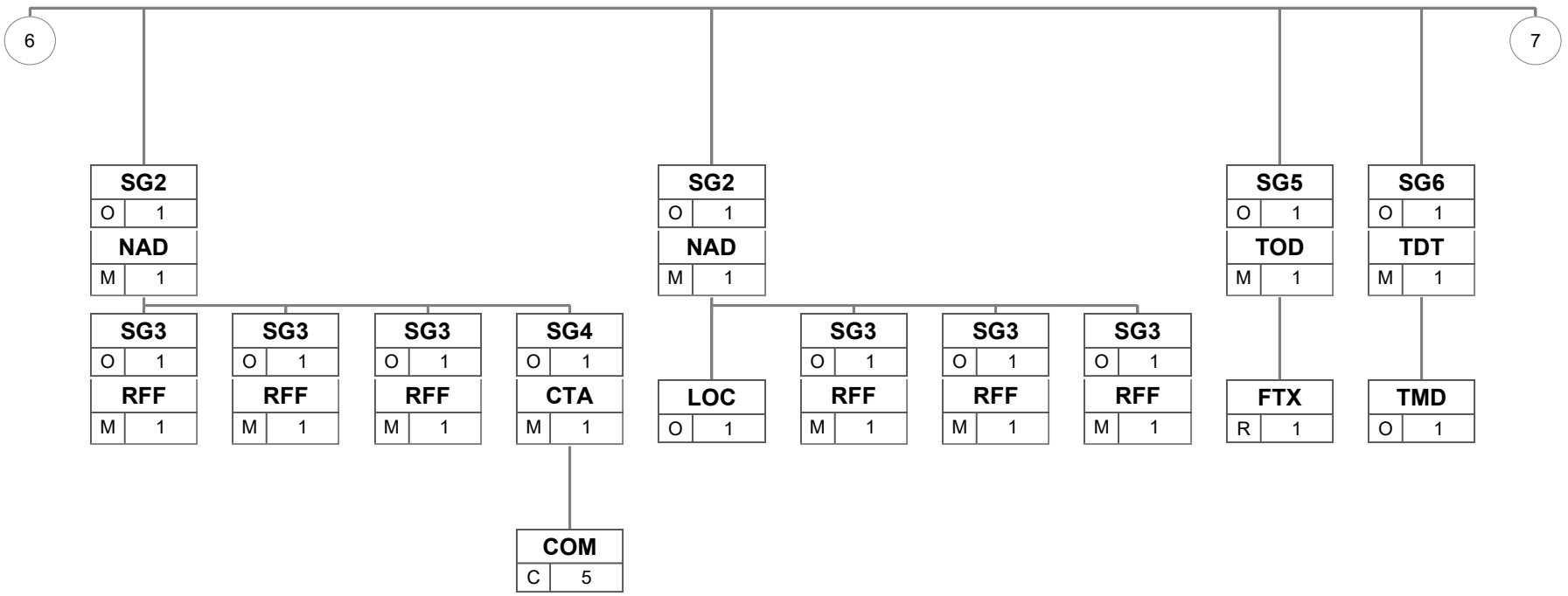

Die schwarzen Segmente/Gruppen werden genutzt, die grauen Segmente/Gruppen sind im Nachrichtentyp enthalten, werden aber nicht genutzt.

Bez
St MaxWdh

Bez = Segment-/Gruppen-Bezeichner, MaxWdh = Maximale Wiederholung der Segmente/Gruppen
St = Status (M=Muss/Mandatory, C=Conditional, R=Erforderlich/Required, O=Optional, D=Abhängig von/Dependent, A=Empfohlen/Advised)

COPYRIGHT VDA 2026

Branchingdiagramm

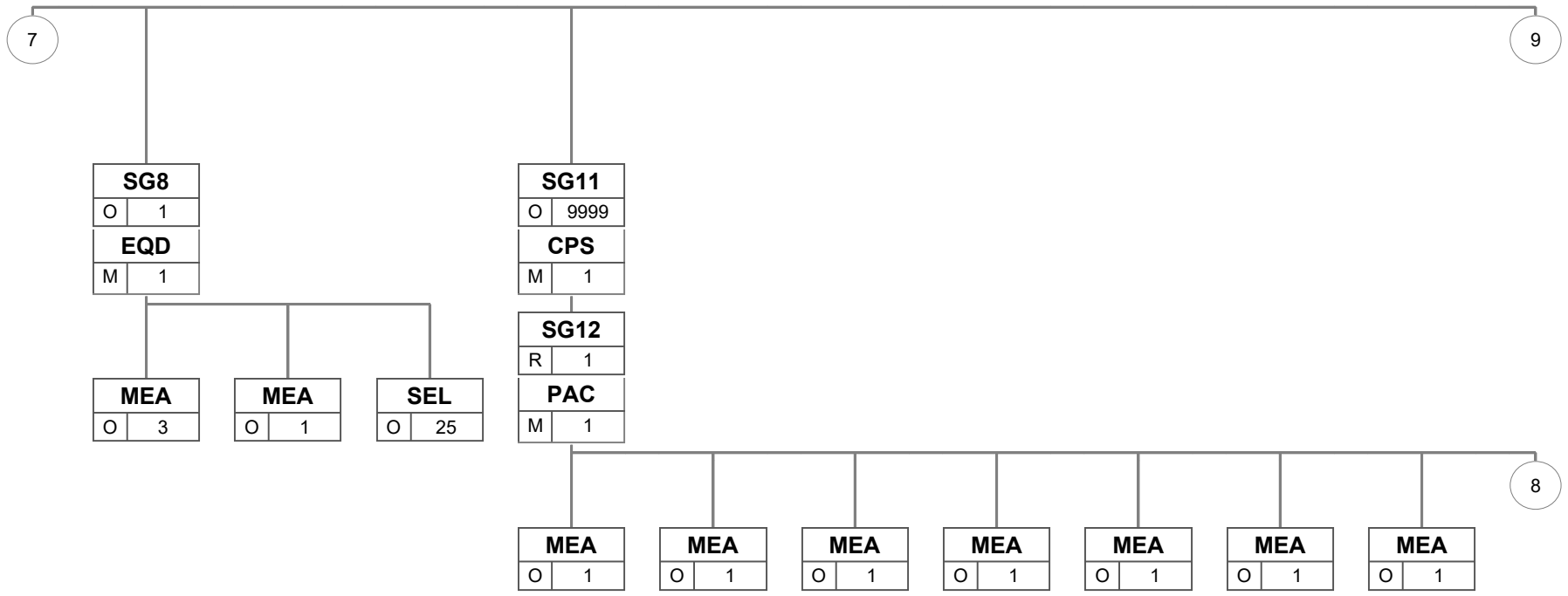

Die schwarzen Segmente/Gruppen werden genutzt, die grauen Segmente/Gruppen sind im Nachrichtentyp enthalten, werden aber nicht genutzt.

Bez
St MaxWdh

Bez = Segment-/Gruppen-Bezeichner, MaxWdh = Maximale Wiederholung der Segmente/Gruppen
St = Status (M=Muss/Mandatory, C=Conditional, R=Erforderlich/Required, O=Optional, D=Abhängig von/Dependent, A=Empfohlen/Advised)

COPYRIGHT VDA 2026

Branchingdiagramm

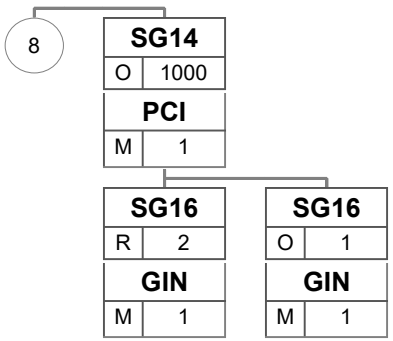

Die schwarzen Segmente/Gruppen werden genutzt, die grauen Segmente/Gruppen sind im Nachrichtentyp enthalten, werden aber nicht genutzt.

Bez	
St	MaxWdh

Bez = Segment-/Gruppen-Bezeichner, MaxWdh = Maximale Wiederholung der Segmente/Gruppen
St = Status (M=Muss/Mandatory, C=Conditional, R=Erforderlich/Required, O=Optional, D=Abhängig von/Dependent, A=Empfohlen/Advised)

COPYRIGHT VDA 2026

Branchingdiagramm

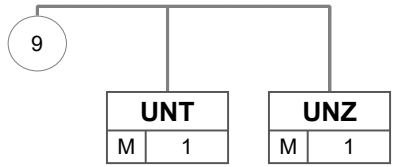

Die schwarzen Segmente/Gruppen werden genutzt, die grauen Segmente/Gruppen sind im Nachrichtentyp enthalten, werden aber nicht genutzt.

Bez
St MaxWdh

Bez = Segment-/Gruppen-Bezeichner, MaxWdh = Maximale Wiederholung der Segmente/Gruppen
St = Status (M=Muss/Mandatory, C=Conditional, R=Erforderlich/Required, O=Optional, D=Abhängig von/Dependent, A=Empfohlen/Advised)

COPYRIGHT VDA 2026

Structure / content

No.	Tag	St	MaxRep	Content
1	**UNA**	R	1	Service string advice
2	**UNB**	M	1	Interchange header
3	**UNH**	M	1	Message header
4	**BGM**	M	1	Beginning of message
5	**DTM**	R	1	Message date
6	**DTM**	D	2	Confirmed delivery or pick-up date/time
7	**DTM**	R	2	Requested shipment or delivery date
8	**MEA**	O	1	Consignment's gross weight
9	**MEA**	O	1	Consignment's net weight
10	**MEA**	O	1	Consignment volume (Total cube)
11	**MEA**	O	1	Consignment's loading meters
12	**MEA**	O	1	Number of handling units in shipment
	SG1	R	1	Number of the Transport Service Order
13	**RFF**	M	1	Number of the Transport Service Order
	SG1	O	1	Transport number (LSP) - Bordereau number
14	**RFF**	M	1	Transport number (LSP) - Bordereau number
	SG1	O	1	Conveyance reference number / Shipment number
15	**RFF**	M	1	Conveyance reference number
	SG1	O	1	Transport chain reference
16	**RFF**	M	1	Transport chain reference
	SG1	O	1	Door opener for goods collection
17	**RFF**	M	1	Access code for goods collection
	SG1	O	2	Reference number of the shipment
18	**RFF**	M	1	Reference number of the shipment assigned by the carrier (e.g., UPS / DHL / DPD number, etc.)
	SG1	O	1	Reference number of the transport order confirmation
19	**RFF**	M	1	Reference number of the transport order confirmation
	SG1	O	1	Customs declaration reference number
20	**RFF**	M	1	Reference number of the customs declaration
	SG1	O	1	Subset ID
21	**RFF**	M	1	Subset ID
	SG2	R	1	Ship from
22	**NAD**	M	1	Ship from
23	**LOC**	O	1	Shipping location/ Place of loading
	SG3	O	1	Additional Party ID (DUNS)
24	**RFF**	M	1	Reference
	SG3	O	1	Additional party ID - plant number
25	**RFF**	M	1	Additional party ID - plant number
	SG3	O	1	Fiscal number
26	**RFF**	M	1	Fiscal number
	SG3	O	1	VAT registration number
27	**RFF**	M	1	VAT registration number
	SG4	O	1	Expedition contact
28	**CTA**	M	1	Expedition contact
29	**COM**	O	5	Communication contact
	SG4	O	1	Information contact
30	**CTA**	M	1	Information contact
31	**COM**	O	5	Communication contact

Tag = Tag; No. = consecutive segment number in the guide; MaxRep = maximum repitition; St = status (M=mandatory, C=conditional, R=required, O=optional, D=dependent, A=advised)

COPYRIGHT VDA 2026

Structure / content

No.	Tag	St	MaxRep	Content
	SG2	R	1	Ship to
32	**NAD**	M	1	ShipTo's name and address
33	**LOC**	O	3	Place of discharge
34	**LOC**	O	1	Place of transshipment
	SG3	O	1	Additional Party ID (DUNS)
35	**RFF**	M	1	Reference
	SG3	O	1	Additional party ID - plant number
36	**RFF**	M	1	Additional party ID - plant number
	SG3	O	1	Fiscal number
37	**RFF**	M	1	Fiscal number
	SG3	O	1	VAT registration number
38	**RFF**	M	1	VAT registration number
	SG2	O	1	Buyer
39	**NAD**	M	1	Buyer's name and address
	SG3	O	1	Additional Party ID (DUNS)
40	**RFF**	M	1	Reference
	SG3	O	1	Fiscal number
41	**RFF**	M	1	Fiscal number
	SG3	O	1	VAT registration number
42	**RFF**	M	1	VAT registration number
	SG2	O	1	Ultimate Customer Party
43	**NAD**	M	1	Ultimate customers's name and address
	SG3	O	1	Fiscal number
44	**RFF**	M	1	Fiscal number
	SG3	O	1	VAT registration number
45	**RFF**	M	1	VAT registration number
	SG2	O	1	Seller / Supplier
46	**NAD**	M	1	Seller's name and address
	SG3	O	1	Additional Party ID (DUNS)
47	**RFF**	M	1	Reference
	SG3	O	1	Fiscal number
48	**RFF**	M	1	Fiscal number
	SG3	O	1	VAT registration number
49	**RFF**	M	1	VAT registration number
	SG2	R	1	Freight forwarder
50	**NAD**	M	1	Freight forwarder's name and address
	SG3	O	1	Additional Party ID (DUNS)
51	**RFF**	M	1	Reference
	SG3	O	1	Fiscal number
52	**RFF**	M	1	Fiscal number
	SG3	O	1	VAT registration number
53	**RFF**	M	1	VAT registration number
	SG4	O	1	Information contact
54	**CTA**	M	1	Information contact
55	**COM**	O	5	Communication contact
	SG2	O	1	Carrier
56	**NAD**	M	1	The carrier is the business partner put in charge of the transportation of the goods by the freight forwarder

Tag = Tag; No. = consecutive segment number in the guide; MaxRep = maximum repitition; St = status (M=mandatory, C=conditional, R=required, O=optional, D=dependent, A=advised)

COPYRIGHT VDA 2026

Structure / content

No.	Tag	St	MaxRep	Content
	SG3	O	1	Additional Party ID (DUNS)
57	**RFF**	M	1	Reference
	SG3	O	1	Fiscal number
58	**RFF**	M	1	Fiscal number
	SG3	O	1	VAT registration number
59	**RFF**	M	1	VAT registration number
	SG4	O	1	Driver's mobile number and perferred Language
60	**CTA**	M	1	Contact information
61	**COM**	C	5	Communication contact
	SG2	O	1	A party in charge of groupage.
62	**NAD**	M	1	A party in charge of groupage.
63	**LOC**	O	1	Place of transshipment
	SG3	O	1	Additional Party ID (DUNS)
64	**RFF**	M	1	Reference
	SG3	O	1	Fiscal number
65	**RFF**	M	1	Fiscal number
	SG3	O	1	VAT registration number
66	**RFF**	M	1	VAT registration number
	SG5	O	1	Carrier arrives with empty packages indicator
67	**TOD**	M	1	Trigger segment
68	**FTX**	R	1	Indicator
	SG6	O	1	Means of transport
69	**TDT**	M	1	Transport information
70	**TMD**	O	1	Transport movement type and loading sequence
	SG8	O	1	Equipment
71	**EQD**	M	1	Equipment details
72	**MEA**	O	3	Length / width / height
73	**MEA**	O	1	Net volume
74	**SEL**	O	25	Seal number
	SG11	O	9999	Despatch control line / List of handling unit groups
75	**CPS**	M	1	Despatch control line / List of handling unit groups
	SG12	R	1	Handling unit group details
76	**PAC**	M	1	Package
77	**MEA**	O	1	Length
78	**MEA**	O	1	Width
79	**MEA**	O	1	Height
80	**MEA**	O	1	Volume
81	**MEA**	O	1	Maximum stacking weight
82	**MEA**	O	1	Maximum stackability for transport purposes
83	**MEA**	O	1	Gross weight
	SG14	O	1000	List of individual handling units
84	**PCI**	M	1	Handling unit label type
	SG16	R	2	Individual handling unit's transport label number
85	**GIN**	M	1	Individual handling unit's transport label number
	SG16	O	1	Package identification, assigned by the logistics service provider
86	**GIN**	M	1	Package identification, assigned by the logistics service provider
87	**UNT**	M	1	Message trailer
88	**UNZ**	M	1	Interchange trailer

Tag = Tag; No. = consecutive segment number in the guide; MaxRep = maximum repitition; St = status (M=mandatory, C=conditional, R=required, O=optional, D=dependent, A=advised)

COPYRIGHT VDA 2026

Generated by GEFEG.FX

Segmente

Nr	Bez	St	MaxWdh	Name
1	UNA	R	1	Service string advice

Standard				Implementierung		
Bez	Name	St	Format	St	Format	Anwendung / Bemerkung
UNA1	Component data element separator	M	an1	M	an1	Colon
UNA2	Data element separator	M	an1	M	an1	Plus sign
UNA3	Decimal notation	M	an1	M	an1	Decimal point or comma This differs from version 4 that only allows decimal point.
UNA4	Release indicator	M	an1	M	an1	Question mark
UNA5	Reserved for future use	M	an1	M	an1	Blank
UNA6	Segment terminator	M	an1	M	an1	Apostrophe

The use of UNA is strongly recommended and UNA5 must be blank.
Beispiel:

```
UNA:+.? '
```

Bez =Bezeichner; Nr = Laufende Segmentnummer im Guide; MaxWdh = Maximale Wiederholung; St = Status (M=Muss/Mandatory, C=Conditional, R=Erforderlich/Required, O=Optional, D=Abhängig von/Dependent, A=Empfohlen/Advised)

COPYRIGHT VDA 2026

Segmente

Nr	Bez	St	MaxWdh	Name
2	UNB	M	1	Interchange header

Standard				Implementierung		
Bez	Name	St	Format	St	Format	Anwendung / Bemerkung
S001	Syntax identifier	M		M		
0001	Syntax identifier	M	a4	M	a4	UNOW shall only be used, if agreed upon by partners in their interchange agreement. **UNOA** UN/ECE level A **UNOB** UN/ECE level B **UNOC** UN/ECE level C **UNOD** UN/ECE level D **UNOW** UN/ECE level W
0002	Syntax version number	M	an1	M	an1	To use syntax version 4 according to the ISO 9735-11 profile, code "X" must be used here. **X** Syntax version 4 ISO 9735-11 profile.
0080	Service code list directory version number	C	an..6	N		Nicht genutzt
0133	Character encoding, coded	C	an..3	N		Nicht genutzt
0076	Syntax release number	C	an2	N		Nicht genutzt
S002	Interchange sender	M		M		
0004	Sender identification	M	an..35	M	an..35	Unique ID of the sender in the data transmission network or system used.
0007	Partner identification code qualifier	C	an..4	O	an..4	Qualifier for the organisation that assigned the identifier, e.g. 59 for Odette.
0008	Address for reverse routing	C	an..14	O	an..14	Address for reverse routing Address of an application or internal system at sender's site to which reply messages should be routed.
0042	Interchange sender internal sub-identification	C	an..35	N		Nicht genutzt
S003	Interchange recipient	M		M		
0010	Recipient identification	M	an..35	M	an..35	Unique ID of the recipient in the data transmission network or system used.
0007	Partner identification code qualifier	C	an..4	O	an..4	
0014	Routing address	C	an..14	O	an..14	Address for reverse routing Address of an application or an internal system at the recipient: For some buyers, the delivery schedules or similar can be generated from different ERP systems. After receipt by the buyer, the messages must then be forwarded to this system and processed there.
0046	Interchange recipient internal sub-identification	C	an..35	N		Nicht genutzt
S004	Date/time of preparation	M		M		
0017	Date of preparation	M	n8	M	n8	Attention: Difference to S3, 8 digits (including century)! Format CCYYMMDD
0019	Time of preparation	M	n4	M	n4	Format hhmm
0020	Interchange control reference	M	an..14	M	an..14	Unique ID of a data transmission.
S005	Recipient's reference, password	C		N		Nicht genutzt
0022	Recipient's reference/password	M	an..14	N		Nicht genutzt
0025	Recipient's reference/password qualifier	C	an2	N		Nicht genutzt
0026	Application reference	C	an..14	N		Nicht genutzt
0029	Processing priority code	C	a1	N		Nicht genutzt
0031	Acknowledgement request	C	n1	N		Nicht genutzt

Bez =Bezeichner; Nr = Laufende Segmentnummer im Guide; MaxWdh = Maximale Wiederholung; St = Status (M=Muss/Mandatory, C=Conditional, R=Erforderlich/Required, O=Optional, D=Abhängig von/Dependent, A=Empfohlen/Advised)

COPYRIGHT VDA 2026

Segmente

Standard				Implementierung		
Bez	Name	St	Format	St	Format	Anwendung / Bemerkung
0032	Communications agreement ID	C	an..35	N		Nicht genutzt
0035	Test indicator	C	n1	O	n1	Only used if the data exchange is for test purposes. This data element is not transmitted for valid transmissions. **1** Interchange is a test

The structure of the EDIFACT interchange and the specification of the service segments for electronic data exchange used in the automotive industry are described in detail in the VDA Recommendation 4900.
Due to the change in ISO standard 9735, VDA-EDIFACT recommendations will be based on the EDIFACT Syntax 3 compliant profile of EDIFACT Syntax 4 (ISO 9735 Part 11) from 2021-12. The service segments (UNA, UNB, UNH, UNS, UNT, UNZ) were adapted accordingly. The user data segments were not changed.
Beispiel:

```
UNB+UNOC:X+VA13:59:EDI-Outbound+XB05:59:EDI-Inbound+20220721:0719+2022000025++++++1'
```

Bez =Bezeichner; Nr = Laufende Segmentnummer im Guide; MaxWdh = Maximale Wiederholung; St = Status (M=Muss/Mandatory, C=Conditional, R=Erforderlich/Required, O=Optional, D=Abhängig von/Dependent, A=Empfohlen/Advised)

COPYRIGHT VDA 2026

Segmente

Nr	Bez	St	MaxWdh	Name
3	UNH	M	1	Message header

Standard				Implementierung		
Bez	Name	St	Format	St	Format	Anwendung / Bemerkung
0062	Message reference number	M	an..14	M	an..14	Message reference number
S009	Message identifier	M		M		
0065	Message type	M	an..6	M	an..6	**DESADV** Despatch advice message
0052	Message version number	M	an..3	M	an..3	**D** Draft version/UN/EDIFACT Directory
0054	Message release number	M	an..3	M	an..3	**20B** Release 2020 - B
0051	Controlling agency	M	an..2	M	an..2	**UN** UN/CEFACT
0057	Association assigned code	C	an..6	R	an..6	Identification of the subset release, assigned by the responsible organisation (Odette). **GAVL22** VDA DESADV - Transport Order Confirmation V2.2 JAI016
0110	Code list directory version number	C	an..6	N		Nicht genutzt
0113	Message type sub-function identification	C	an..6	N		Nicht genutzt
0068	Common access reference	C	an..35	N		Nicht genutzt
S010	Status of the transfer	C		N		Nicht genutzt
0070	Sequence of transfers	M	n..2	N		Nicht genutzt
0073	First and last transfer	C	a1	N		Nicht genutzt
S016	Message subset identification	C		N		Nicht genutzt
0115	Message subset identification	M	an..14	N		Nicht genutzt
0116	Message subset version number	C	an..3	N		Nicht genutzt
0118	Message subset release number	C	an..3	N		Nicht genutzt
0051	Controlling agency	C	an..2	N		Nicht genutzt
S017	Message implementation guideline identification	C		N		Nicht genutzt
0121	Message implementation guideline identification	M	an..14	N		Nicht genutzt
0122	Message implementation guideline version number	C	an..3	N		Nicht genutzt
0124	Message implementation guideline release number	C	an..3	N		Nicht genutzt
0051	Controlling agency	C	an..2	N		Nicht genutzt
S018	Scenario identification	C		N		Nicht genutzt
0127	Scenario identification	M	an..14	N		Nicht genutzt
0128	Scenario version number	C	an..3	N		Nicht genutzt
0130	Scenario release number	C	an..3	N		Nicht genutzt
0051	Controlling agency	C	an..2	N		Nicht genutzt

This document describes the segments and data elements these are necessary for the confirmation of a transport order.
In the simplest case, the transport service provider uses the transport order as a template for the confirmation and inserts only the additional information such as, for example, the confirmed delivery or pick-up date (DTM+69 or DTM+79), its own despatch reference and the ID of the means of transport (TDT 8213).
In this case, the actually transmitted transport order confirmation may contain segments (for example, DTM+132), which are not described in this Guideline. The recipient of the order confirmation will not process this information. The additional

Bez =Bezeichner; Nr = Laufende Segmentnummer im Guide; MaxWdh = Maximale Wiederholung; St = Status (M=Muss/Mandatory, C=Conditional, R=Erforderlich/Required, O=Optional, D=Abhängig von/Dependent, A=Empfohlen/Advised)

COPYRIGHT VDA 2026

Segmente

segments present in the message are not a rejection reason for the message.
Beispiel:

UNH+9+DESADV:D:20B:UN:GAVL22'

Bez =Bezeichner; Nr = Laufende Segmentnummer im Guide; MaxWdh = Maximale Wiederholung; St = Status (M=Muss/Mandatory, C=Conditional, R=Erforderlich/Required, O=Optional, D=Abhängig von/Dependent, A=Empfohlen/Advised)

COPYRIGHT VDA 2026

Segmente

Nr	Bez	St	MaxWdh	Name
4	BGM	M	1	Beginning of message

Standard				Implementierung		
Bez	Name	St	Format	St	Format	Anwendung / Bemerkung
C002	Document/message name	C		R		
1001	Document name code	C	an..3	R	an..3	**X01** Transport order confirmation, materials - DESADV ODDC001(1)
1131	Code list identification code	C	an..17	N		Nicht genutzt
3055	Code list responsible agency code	C	an..3	R	an..3	**10** ODETTE
1000	Document name	C	an..35	O	an..35	Additional profile information Can be used to specify a company-specific profile of this application description.
C106	Document/message identification	C		R		
1004	Document identifier	C	an..70	R	an..35	Document identifier of the transport order confirmation Unique identifier of a document. Synonym: document number
1056	Version identifier	C	an..9	O	an..9	May be used to distinguish several versions of the message (e.g. initial original with subsequent cancellation)
1060	Revision identifier	C	an..6	N		Nicht genutzt
1225	Message function code	C	an..3	R	an..3	1 - Cancellation - complete cancellation, transport order which has already been confirmed is rejected (reference to the previous message in RFF+TIN). 5 - Replace - this message replaces the complete sent message (reference to the previous message in RFF+TIN). 9 - Original - confirmation of the transport order. 27 - Not accepted - complete cancellation of a transport order that has not yet been answered. - This code should only be used if no APERAK message is used in the scenario with the transport service provider. O9 - Indicator for a split into several schipments For code 1 and 5 it is assumed that the current message has the same number as the originally sent confirmation. If necessary, DE 1056 can be used to differenciate between the versions of the message. **1** Cancellation **5** Replace **9** Original **27** Not accepted **O9** Original transport order confirmation displays a shipment split ODDC134(1)
4343	Response type code	C	an..3	N		Nicht genutzt
1373	Document status code	C	an..3	N		Nicht genutzt
3453	Language name code	C	an..3	N		Nicht genutzt

Beispiel:

```
BGM+X01::10:Prozesskennzeichen+NummerTransportauftragsbestätigung:1+9'
```

Bez =Bezeichner; Nr = Laufende Segmentnummer im Guide; MaxWdh = Maximale Wiederholung; St = Status (M=Muss/Mandatory, C=Conditional, R=Erforderlich/Required, O=Optional, D=Abhängig von/Dependent, A=Empfohlen/Advised)

COPYRIGHT VDA 2026

Segmente

Nr	Bez	St	MaxWdh	Name
5	DTM	R	1	Message date

Standard				Implementierung			
Bez	Name	St	Format	St	Format	Anwendung / Bemerkung	
C507	Date/time/period	M		M			
2005	Date or time or period function code qualifier	M	an..3	M	an..3		
						137	Document issue date time
2380	Date or time or period text	C	an..35	R	an..12	Date/time of creation of the transport order	
2379	Date or time or period format code	C	an..3	R	an..3		
						102	CCYYMMDD
						203	CCYYMMDDHHMM
						205	CCYYMMDDHHMMZHHMM

Beispiel:

```
DTM+137:999999999999:203'
```

Bez =Bezeichner; Nr = Laufende Segmentnummer im Guide; MaxWdh = Maximale Wiederholung; St = Status (M=Muss/Mandatory, C=Conditional, R=Erforderlich/Required, O=Optional, D=Abhängig von/Dependent, A=Empfohlen/Advised)

COPYRIGHT VDA 2026

Segmente

Nr	Bez	St	MaxWdh	Name
6	DTM	D	2	Confirmed delivery or pick-up date/time

Standard				Implementierung		
Bez	Name	St	Format	St	Format	Anwendung / Bemerkung
C507	Date/time/period	M		M		
2005	Date or time or period function code qualifier	M	an..3	M	an..3	79 - Confirmed pick-up date/time at the consignor 69 - Confirmed delivery date/time at the recipient **69** Delivery date time, promised before **79** Shipment date/time, promised for
2380	Date or time or period text	C	an..35	R	an..35	Confirmed delivery or pick-up date/time
2379	Date or time or period format code	C	an..3	R	an..3	The use of time / time window depends on the concrete contract between the customer, supplier and transport service provider **102** CCYYMMDD **203** CCYYMMDDHHMM **205** CCYYMMDDHHMMZHHMM **719** CCYYMMDDHHMM-CCYYMMDDHHMM **721** CCYYMMDDHHMMZHHMM-CCYYMMDDHHMMZHHMM

The confirmed delivery or pick-up date has to be sent unless the message is a rejection (not accepted - code 27 in BGM. 1225) of a transport order.
Beispiel:

```
DTM+79:999999999999:203'
```

Bez =Bezeichner; Nr = Laufende Segmentnummer im Guide; MaxWdh = Maximale Wiederholung; St = Status (M=Muss/Mandatory, C=Conditional, R=Erforderlich/Required, O=Optional, D=Abhängig von/Dependent, A=Empfohlen/Advised)

COPYRIGHT VDA 2026

Segmente

Nr	Bez	St	MaxWdh	Name
7	DTM	R	2	Requested shipment or delivery date

Standard				Implementierung		
Bez	Name	St	Format	St	Format	Anwendung / Bemerkung
C507	Date/time/period	M		M		
2005	Date or time or period function code qualifier	M	an..3	M	an..3	**10** Shipment date/time, requested **2** Delivery date/time, requested
2380	Date or time or period text	C	an..35	R	an..24	Requested shipment or delivery date
2379	Date or time or period format code	C	an..3	R	an..3	The use of time / time window depends on the concrete contract between the customer, supplier and transport service provider **102** CCYYMMDD **203** CCYYMMDDHHMM **205** CCYYMMDDHHMMZHHMM **719** CCYYMMDDHHMM-CCYYMMDDHHMM **721** CCYYMMDDHHMMZHHMM-CCYYMMDDHHMMZHHMM

Beispiel:

```
DTM+10:20131201:102'
```

Bez =Bezeichner; Nr = Laufende Segmentnummer im Guide; MaxWdh = Maximale Wiederholung; St = Status (M=Muss/Mandatory, C=Conditional, R=Erforderlich/Required, O=Optional, D=Abhängig von/Dependent, A=Empfohlen/Advised)

COPYRIGHT VDA 2026

Segmente

Nr	Bez	St	MaxWdh	Name
8	MEA	O	1	Consignment's gross weight

Standard				Implementierung		
Bez	Name	St	Format	St	Format	Anwendung / Bemerkung
6311	Measurement purpose code qualifier	M	an..3	M	an..3	**AAX** Consignment measurement
C502	Measurement details	C		R		
6313	Measured attribute code	C	an..3	R	an..3	**AAD** Consignment gross weight
6321	Measurement significance code	C	an..3	N		Nicht genutzt
6155	Non-discrete measurement name code	C	an..17	N		Nicht genutzt
6154	Non-discrete measurement name	C	an..70	N		Nicht genutzt
C174	Value/range	C		R		
6411	Measurement unit code	C	an..8	R	an..8	**KGM** kilogram
6314	Measure	C	an..18	R	n..12	Gross weight - weight (mass) without carrier's equipment
6162	Range minimum quantity	C	n..18	N		Nicht genutzt
6152	Range maximum quantity	C	n..18	N		Nicht genutzt
6432	Significant digits quantity	C	n..2	N		Nicht genutzt
7383	Surface or layer code	C	an..3	N		Nicht genutzt

Beispiel:

```
MEA+AAX+AAD+KGM:9'
```

Bez =Bezeichner; Nr = Laufende Segmentnummer im Guide; MaxWdh = Maximale Wiederholung; St = Status (M=Muss/Mandatory, C=Conditional, R=Erforderlich/Required, O=Optional, D=Abhängig von/Dependent, A=Empfohlen/Advised)

COPYRIGHT VDA 2026

Segmente

Nr	Bez	St	MaxWdh	Name
9	MEA	O	1	Consignment's net weight

Standard				Implementierung		
Bez	Name	St	Format	St	Format	Anwendung / Bemerkung
6311	Measurement purpose code qualifier	M	an..3	M	an..3	**AAX** Consignment measurement
C502	Measurement details	C		R		
6313	Measured attribute code	C	an..3	R	an..3	**AAL** Net weight
6321	Measurement significance code	C	an..3	N		Nicht genutzt
6155	Non-discrete measurement name code	C	an..17	N		Nicht genutzt
6154	Non-discrete measurement name	C	an..70	N		Nicht genutzt
C174	Value/range	C		R		
6411	Measurement unit code	C	an..8	R	an..8	**KGM** kilogram
6314	Measure	C	an..18	R	n..12	Weight (mass) of the goods including retail package.
6162	Range minimum quantity	C	n..18	N		Nicht genutzt
6152	Range maximum quantity	C	n..18	N		Nicht genutzt
6432	Significant digits quantity	C	n..2	N		Nicht genutzt
7383	Surface or layer code	C	an..3	N		Nicht genutzt

Weight (mass) of goods including any packing normally going with them to a buyer in a retail sale (Weight of articles in the package).
Beispiel:

```
MEA+AAX+AAL+KGM:9'
```

Bez =Bezeichner; Nr = Laufende Segmentnummer im Guide; MaxWdh = Maximale Wiederholung; St = Status (M=Muss/Mandatory, C=Conditional, R=Erforderlich/Required, O=Optional, D=Abhängig von/Dependent, A=Empfohlen/Advised)

COPYRIGHT VDA 2026

Segmente

Nr	Bez	St	MaxWdh	Name
10	MEA	O	1	Consignment volume (Total cube)

Standard				Implementierung		
Bez	Name	St	Format	St	Format	Anwendung / Bemerkung
6311	Measurement purpose code qualifier	M	an..3	M	an..3	**AAX** Consignment measurement
C502	Measurement details	C		R		
6313	Measured attribute code	C	an..3	R	an..3	**ABJ** Volume
6321	Measurement significance code	C	an..3	N		Nicht genutzt
6155	Non-discrete measurement name code	C	an..17	N		Nicht genutzt
6154	Non-discrete measurement name	C	an..70	N		Nicht genutzt
C174	Value/range	C		R		
6411	Measurement unit code	C	an..8	R	an..8	**MTQ** cubic metre
6314	Measure	C	an..18	R	n..9	Volume measure
6162	Range minimum quantity	C	n..18	N		Nicht genutzt
6152	Range maximum quantity	C	n..18	N		Nicht genutzt
6432	Significant digits quantity	C	n..2	N		Nicht genutzt
7383	Surface or layer code	C	an..3	N		Nicht genutzt

Total cube of all goods items referred to as one despatch.
Beispiel:

```
MEA+AAX+ABJ+MTQ:9'
```

Bez =Bezeichner; Nr = Laufende Segmentnummer im Guide; MaxWdh = Maximale Wiederholung; St = Status (M=Muss/Mandatory, C=Conditional, R=Erforderlich/Required, O=Optional, D=Abhängig von/Dependent, A=Empfohlen/Advised)

COPYRIGHT VDA 2026

Segmente

Nr	Bez	St	MaxWdh	Name
11	MEA	O	1	Consignment's loading meters

Standard				Implementierung		
Bez	Name	St	Format	St	Format	Anwendung / Bemerkung
6311	Measurement purpose code qualifier	M	an..3	M	an..3	**LMT** Loading meters
C502	Measurement details	C		N		Nicht genutzt
6313	Measured attribute code	C	an..3	N		Nicht genutzt
6321	Measurement significance code	C	an..3	N		Nicht genutzt
6155	Non-discrete measurement name code	C	an..17	N		Nicht genutzt
6154	Non-discrete measurement name	C	an..70	N		Nicht genutzt
C174	Value/range	C		R		
6411	Measurement unit code	C	an..8	R	an..8	**MTR** metre
6314	Measure	C	an..18	R	n..12	Loading meters
6162	Range minimum quantity	C	n..18	N		Nicht genutzt
6152	Range maximum quantity	C	n..18	N		Nicht genutzt
6432	Significant digits quantity	C	n..2	N		Nicht genutzt
7383	Surface or layer code	C	an..3	N		Nicht genutzt

The length in a vehicle used or usable for the transport of goods, whereby the complete width and height over that length is needed for the goods.
Beispiel:

MEA+LMT++MTR:9'

Bez =Bezeichner; Nr = Laufende Segmentnummer im Guide; MaxWdh = Maximale Wiederholung; St = Status (M=Muss/Mandatory, C=Conditional, R=Erforderlich/Required, O=Optional, D=Abhängig von/Dependent, A=Empfohlen/Advised)

COPYRIGHT VDA 2026

Segmente

Nr	Bez	St	MaxWdh	Name
12	MEA	O	1	Number of handling units in shipment

Standard				Implementierung		
Bez	Name	St	Format	St	Format	Anwendung / Bemerkung
6311	Measurement purpose code qualifier	M	an..3	M	an..3	**AAE** Measurement
C502	Measurement details	C		N		Nicht genutzt
6313	Measured attribute code	C	an..3	N		Nicht genutzt
6321	Measurement significance code	C	an..3	N		Nicht genutzt
6155	Non-discrete measurement name code	C	an..17	N		Nicht genutzt
6154	Non-discrete measurement name	C	an..70	N		Nicht genutzt
C174	Value/range	C		R		
6411	Measurement unit code	C	an..8	R	an..8	**C62** one **PCE** piece
6314	Measure	C	an..18	R	n..12	Actual number of handling units in shipment
6162	Range minimum quantity	C	n..18	N		Nicht genutzt
6152	Range maximum quantity	C	n..18	N		Nicht genutzt
6432	Significant digits quantity	C	n..2	N		Nicht genutzt
7383	Surface or layer code	C	an..3	N		Nicht genutzt

Beispiel:

```
MEA+AAE++C62:9'
```

Bez =Bezeichner; Nr = Laufende Segmentnummer im Guide; MaxWdh = Maximale Wiederholung; St = Status (M=Muss/Mandatory, C=Conditional, R=Erforderlich/Required, O=Optional, D=Abhängig von/Dependent, A=Empfohlen/Advised)

COPYRIGHT VDA 2026

Segmente

Nr	Bez	St	MaxWdh	Name
	SG1	R	1	Number of the Transport Service Order
13	RFF	M	1	Number of the Transport Service Order

Standard				Implementierung		
Bez	Name	St	Format	St	Format	Anwendung / Bemerkung
C506	Reference	M		M		
1153	Reference code qualifier	M	an..3	M	an..3	**TIN** Transport instruction number
1154	Reference identifier	C	an..70	R	an..35	Number of the Transport Service Order
1156	Document line identifier	C	an..6	N		Nicht genutzt
1056	Version identifier	C	an..9	N		Nicht genutzt
1060	Revision identifier	C	an..6	N		Nicht genutzt

Beispiel:

```
RFF+TIN:TransportServiceOrderNumb'
```

Bez =Bezeichner; Nr = Laufende Segmentnummer im Guide; MaxWdh = Maximale Wiederholung; St = Status (M=Muss/Mandatory, C=Conditional, R=Erforderlich/Required, O=Optional, D=Abhängig von/Dependent, A=Empfohlen/Advised)

COPYRIGHT VDA 2026

Segmente

Nr	Bez	St	MaxWdh	Name
	SG1	O	1	Transport number (LSP) - Bordereau number
14	RFF	M	1	Transport number (LSP) - Bordereau number

Standard				Implementierung		
Bez	Name	St	Format	St	Format	Anwendung / Bemerkung
C506	Reference	M		M		
1153	Reference code qualifier	M	an..3	M	an..3	**AFC** Bordereau number
1154	Reference identifier	C	an..70	R	an..35	Transport number (LSP) - Bordero number
1156	Document line identifier	C	an..6	N		Nicht genutzt
1056	Version identifier	C	an..9	N		Nicht genutzt
1060	Revision identifier	C	an..6	N		Nicht genutzt

Beispiel:

```
RFF+AFC:Transport number (LSP)'
```

Bez =Bezeichner; Nr = Laufende Segmentnummer im Guide; MaxWdh = Maximale Wiederholung; St = Status (M=Muss/Mandatory, C=Conditional, R=Erforderlich/Required, O=Optional, D=Abhängig von/Dependent, A=Empfohlen/Advised)

COPYRIGHT VDA 2026

Segmente

Nr	Bez	St	MaxWdh	Name
	SG1	O	1	Conveyance reference number / Shipment number
15	RFF	M	1	Conveyance reference number

Standard				Implementierung			
Bez	Name	St	Format	St	Format	Anwendung / Bemerkung
C506	Reference	M		M		
1153	Reference code qualifier	M	an..3	M	an..3	**CRN** Transport means journey identifier
1154	Reference identifier	C	an..70	R	an..70	Unique reference given to a certain journey or departure of a means of transport (generic term).
1156	Document line identifier	C	an..6	N		Nicht genutzt
1056	Version identifier	C	an..9	N		Nicht genutzt
1060	Revision identifier	C	an..6	N		Nicht genutzt

Beispiel:

RFF+CRN:X'

Bez =Bezeichner; Nr = Laufende Segmentnummer im Guide; MaxWdh = Maximale Wiederholung; St = Status (M=Muss/Mandatory, C=Conditional, R=Erforderlich/Required, O=Optional, D=Abhängig von/Dependent, A=Empfohlen/Advised)

COPYRIGHT VDA 2026

Segmente

Nr	Bez	St	MaxWdh	Name
	SG1	O	1	Transport chain reference
16	RFF	M	1	Transport chain reference

Standard				Implementierung		
Bez	Name	St	Format	St	Format	Anwendung / Bemerkung
C506	Reference	M		M		
1153	Reference code qualifier	M	an..3	M	an..3	**AKI** Ordering customer's second reference number
1154	Reference identifier	C	an..70	R	an..35	Transport chain reference
1156	Document line identifier	C	an..6	N		Nicht genutzt
1056	Version identifier	C	an..9	N		Nicht genutzt
1060	Revision identifier	C	an..6	N		Nicht genutzt

This reference links the individual transport legs of a shipment in a segmented transport chain where each leg has a separate transport order. It is assigned by the creator of the first transport order and may be the same as the order number of the first transport order. In segmented transport chains, this reference should be transmitted in all subsequent transport messages and in the associated billing.
In case the forwarder needs to split shipments, an own reference number has to be assigned to each individual shipment.
Beispiel:

```
RFF+AKI:Transport ID'
```

Bez =Bezeichner; Nr = Laufende Segmentnummer im Guide; MaxWdh = Maximale Wiederholung; St = Status (M=Muss/Mandatory, C=Conditional, R=Erforderlich/Required, O=Optional, D=Abhängig von/Dependent, A=Empfohlen/Advised)

COPYRIGHT VDA 2026

Segmente

Nr	Bez	St	MaxWdh	Name
	SG1	O	1	Door opener for goods collection
17	RFF	M	1	Access code for goods collection

Standard				Implementierung			
Bez	Name	St	Format	St	Format	Anwendung / Bemerkung
C506	Reference	M		M		
1153	Reference code qualifier	M	an..3	R	an..3	**ABE** Declarant's reference number
1154	Reference identifier	C	an..70	R	an..35	Door opener for goods collection
1156	Document line identifier	C	an..6	N		Nicht genutzt
1056	Version identifier	C	an..9	N		Nicht genutzt
1060	Revision identifier	C	an..6	N		Nicht genutzt

Beispiel:

```
RFF+ABE:Access code'
```

Bez =Bezeichner; Nr = Laufende Segmentnummer im Guide; MaxWdh = Maximale Wiederholung; St = Status (M=Muss/Mandatory, C=Conditional, R=Erforderlich/Required, O=Optional, D=Abhängig von/Dependent, A=Empfohlen/Advised)

COPYRIGHT VDA 2026

Segmente

Nr	Bez	St	MaxWdh	Name
	SG1	O	2	Reference number of the shipment
18	RFF	M	1	Reference number of the shipment assigned by the carrier (e.g., UPS / DHL / DPD number, etc.)

Standard				Implementierung		
Bez	Name	St	Format	St	Format	Anwendung / Bemerkung
C506	Reference	M		M		
1153	Reference code qualifier	M	an..3	M	an..3	AVU - Reference number assigned by carrier FF - Reference number assigned by forwarder **AVU** Unique goods shipment identifier **FF** Consignment identifier, freight forwarder assigned
1154	Reference identifier	C	an..70	R	an..35	Reference number of the shipment assigned by the carrier (e.g., UPS / DHL / DPD number, etc.)
1156	Document line identifier	C	an..6	N		Nicht genutzt
1056	Version identifier	C	an..9	N		Nicht genutzt
1060	Revision identifier	C	an..6	N		Nicht genutzt

Beispiel:

```
RFF+FF:CarriersShipmentNumber'
```

Bez =Bezeichner; Nr = Laufende Segmentnummer im Guide; MaxWdh = Maximale Wiederholung; St = Status (M=Muss/Mandatory, C=Conditional, R=Erforderlich/Required, O=Optional, D=Abhängig von/Dependent, A=Empfohlen/Advised)

COPYRIGHT VDA 2026

Segmente

Nr	Bez	St	MaxWdh	Name
	SG1	O	1	Reference number of the transport order confirmation
19	RFF	M	1	Reference number of the transport order confirmation

Standard				Implementierung			
Bez	Name	St	Format	St	Format	Anwendung / Bemerkung
C506	Reference	M		M		
1153	Reference code qualifier	M	an..3	M	an..3	**AHI** Transport contract reference number
1154	Reference identifier	C	an..70	R	an..35	Number of the transport order confirmation
1156	Document line identifier	C	an..6	N		Nicht genutzt
1056	Version identifier	C	an..9	N		Nicht genutzt
1060	Revision identifier	C	an..6	N		Nicht genutzt

Beispiel:

```
RFF+AHI:TranspOrderConfNumber'
```

Bez =Bezeichner; Nr = Laufende Segmentnummer im Guide; MaxWdh = Maximale Wiederholung; St = Status (M=Muss/Mandatory, C=Conditional, R=Erforderlich/Required, O=Optional, D=Abhängig von/Dependent, A=Empfohlen/Advised)

COPYRIGHT VDA 2026

Segmente

Nr	Bez	St	MaxWdh	Name
	SG1	O	1	Customs declaration reference number
20	RFF	M	1	Reference number of the customs declaration

Standard				Implementierung		
Bez	Name	St	Format	St	Format	Anwendung / Bemerkung
C506	Reference	M		M		
1153	Reference code qualifier	M	an..3	M	an..3	**ABT** Goods declaration document identifier, Customs
1154	Reference identifier	C	an..70	R	an..35	Reference number of the customs declaration
1156	Document line identifier	C	an..6	N		Nicht genutzt
1056	Version identifier	C	an..9	N		Nicht genutzt
1060	Revision identifier	C	an..6	N		Nicht genutzt

Beispiel:

```
RFF+ABT:ReferenceNumber'
```

Bez =Bezeichner; Nr = Laufende Segmentnummer im Guide; MaxWdh = Maximale Wiederholung; St = Status (M=Muss/Mandatory, C=Conditional, R=Erforderlich/Required, O=Optional, D=Abhängig von/Dependent, A=Empfohlen/Advised)

COPYRIGHT VDA 2026

Segmente

Nr	Bez	St	MaxWdh	Name
	SG1	O	1	Subset ID
21	RFF	M	1	Subset ID

Standard				Implementierung		
Bez	Name	St	Format	St	Format	Anwendung / Bemerkung
C506	Reference	M		M		
1153	Reference code qualifier	M	an..3	M	an..3	**AOZ** Implementation version number
1154	Reference identifier	C	an..70	R	an..70	Reference to the (usually customer's) subset ID/guideline version, this message is conformant to.
1156	Document line identifier	C	an..6	N		Nicht genutzt
1056	Version identifier	C	an..9	N		Nicht genutzt
1060	Revision identifier	C	an..6	N		Nicht genutzt

Beispiel:

```
RFF+AOZ:Version3.2'
```

Bez =Bezeichner; Nr = Laufende Segmentnummer im Guide; MaxWdh = Maximale Wiederholung; St = Status (M=Muss/Mandatory, C=Conditional, R=Erforderlich/Required, O=Optional, D=Abhängig von/Dependent, A=Empfohlen/Advised)

COPYRIGHT VDA 2026

Segmente

Nr	Bez	St	MaxWdh	Name
	SG2	R	1	Ship from
22	NAD	M	1	Ship from

Standard				Implementierung		
Bez	Name	St	Format	St	Format	Anwendung / Bemerkung
3035	Party function code qualifier	M	an..3	M	an..3	**SF** Ship from
C082	Party identification details	C		O		
3039	Party identifier	M	an..35	R	an..20	Unique identification of a party by an ID.
1131	Code list identification code	C	an..17	N		Nicht genutzt
3055	Code list responsible agency code	C	an..3	R	an..3	Code specifying the agency responsible for a code list. **10** ODETTE **16** US, D&B (Dun & Bradstreet Corporation) **91** Assigned by seller or seller's agent **92** Assigned by buyer or buyer's agent
C058	Name and address	C		N		Nicht genutzt
3124	Name and address description	M	an..35	N		Nicht genutzt
3124	Name and address description	C	an..35	N		Nicht genutzt
3124	Name and address description	C	an..35	N		Nicht genutzt
3124	Name and address description	C	an..35	N		Nicht genutzt
3124	Name and address description	C	an..35	N		Nicht genutzt
C080	Party name	C		O		
3036	Party name	M	an..70	M	an..35	Single text line for specification of a name
3036	Party name	C	an..70	O	an..35	see 3036 # 1
3036	Party name	C	an..70	N		Nicht genutzt
3036	Party name	C	an..70	N		Nicht genutzt
3036	Party name	C	an..70	N		Nicht genutzt
3045	Party name format code	C	an..3	N		Nicht genutzt
C059	Street	C		O		
3042	Street and number or post office box identifier	M	an..256	M	an..35	The name that identifies the location of a house or building: usually within a street as part of an address.
3042	Street and number or post office box identifier	C	an..256	O	an..35	see 3042 # 1
3042	Street and number or post office box identifier	C	an..256	N		Nicht genutzt
3042	Street and number or post office box identifier	C	an..256	N		Nicht genutzt
3164	City name	C	an..35	O	an..35	The name of the city, town, or village of this address.
C819	Country subdivision details	C		O		
3229	Country subdivision identifier	C	an..9	R	an..9	State or region within a country. The use of UN LoCodes is recommended.
1131	Code list identification code	C	an..17	N		Nicht genutzt
3055	Code list responsible agency code	C	an..3	N		Nicht genutzt
3228	Country subdivision name	C	an..70	N		Nicht genutzt
3251	Postal identification code	C	an..17	O	an..17	The identifier for one or more properties according to the postal service of that country; a group of letters and/or numbers added to the postal address to assist in the sorting

Bez =Bezeichner; Nr = Laufende Segmentnummer im Guide; MaxWdh = Maximale Wiederholung; St = Status (M=Muss/Mandatory, C=Conditional, R=Erforderlich/Required, O=Optional, D=Abhängig von/Dependent, A=Empfohlen/Advised)

COPYRIGHT VDA 2026

Segmente

Standard				Implementierung		
Bez	Name	St	Format	St	Format	Anwendung / Bemerkung
						of mail.
3207	Country identifier	C	an..3	O	a2	Provides the country part of an address using a code. Use ISO3166 two alpha code.

The party, which consigns or sends goods.
Beispiel:

NAD+SF+X::10++X:X+X:X++++DE'

COPYRIGHT VDA 2026

Generated by GEFEG.FX

Segmente

Nr	Bez	St	MaxWdh	Name
	SG2	R	1	Ship from
23	LOC	O	1	Shipping location/ Place of loading

Standard				Implementierung		
Bez	Name	St	Format	St	Format	Anwendung / Bemerkung
3227	Location function code qualifier	M	an..3	M	an..3	**9** Place of loading
C517	Location identification	C		R		
3225	Location identifier	C	an..35	R	an..17	Identifier / code specifying the name of a location.
1131	Code list identification code	C	an..17	N		Nicht genutzt
3055	Code list responsible agency code	C	an..3	O	an..3	**91** Assigned by seller or seller's agent
3224	Location name	C	an..256	O	an..256	Name of place/location, other than city name.
C519	Related location one identification	C		N		Nicht genutzt
3223	First related location identifier	C	an..35	N		Nicht genutzt
1131	Code list identification code	C	an..17	N		Nicht genutzt
3055	Code list responsible agency code	C	an..3	N		Nicht genutzt
3222	First related location name	C	an..70	N		Nicht genutzt
C553	Related location two identification	C		O		
3233	Second related location identifier	C	an..35	O	an..35	Additional location ID
1131	Code list identification code	C	an..17	N		Nicht genutzt
3055	Code list responsible agency code	C	an..3	D	an..3	Code specifying the agency responsible for a code list. Has to be provided if 3233 is used. **10** ODETTE **16** US, D&B (Dun & Bradstreet Corporation) **91** Assigned by seller or seller's agent **92** Assigned by buyer or buyer's agent
3232	Second related location name	C	an..70	O	an..70	Additional location text
5479	Relation code	C	an..3	N		Nicht genutzt

Place where goods are taken over for carriage.
Beispiel:

LOC+9+X::91:X++:::X'

Bez =Bezeichner; Nr = Laufende Segmentnummer im Guide; MaxWdh = Maximale Wiederholung; St = Status (M=Muss/Mandatory, C=Conditional, R=Erforderlich/Required, O=Optional, D=Abhängig von/Dependent, A=Empfohlen/Advised)

COPYRIGHT VDA 2026

Segmente

Nr	Bez	St	MaxWdh	Name
	SG3	O	1	Additional Party ID (DUNS)
24	RFF	M	1	Reference

Standard				Implementierung		
Bez	Name	St	Format	St	Format	Anwendung / Bemerkung
C506	Reference	M		M		
1153	Reference code qualifier	M	an..3	M	an..3	**ANK** Reference number assigned by third party
1154	Reference identifier	C	an..70	R	an..17	DUNS number or VAT ID
1156	Document line identifier	C	an..6	N		Nicht genutzt
1056	Version identifier	C	an..9	N		Nicht genutzt
1060	Revision identifier	C	an..6	N		Nicht genutzt

This segment can be used to transmit the DUNS number of the business partner,
in addition to the customer number or the supplier number
Beispiel:

RFF+ANK:X'

Bez =Bezeichner; Nr = Laufende Segmentnummer im Guide; MaxWdh = Maximale Wiederholung; St = Status (M=Muss/Mandatory, C=Conditional, R=Erforderlich/Required, O=Optional, D=Abhängig von/Dependent, A=Empfohlen/Advised)

COPYRIGHT VDA 2026

Segmente

Nr	Bez	St	MaxWdh	Name
	SG3	O	1	Additional party ID - plant number
25	RFF	M	1	Additional party ID - plant number

Standard				Implementierung			
Bez	Name	St	Format	St	Format	Anwendung / Bemerkung
C506	Reference	M		M		
1153	Reference code qualifier	M	an..3	M	an..3	**PE** Plant number
1154	Reference identifier	C	an..70	R	an..70	Additional party ID - plant number
1156	Document line identifier	C	an..6	N		Nicht genutzt
1056	Version identifier	C	an..9	N		Nicht genutzt
1060	Revision identifier	C	an..6	N		Nicht genutzt

Beispiel:

```
RFF+PE:12345'
```

Bez =Bezeichner; Nr = Laufende Segmentnummer im Guide; MaxWdh = Maximale Wiederholung; St = Status (M=Muss/Mandatory, C=Conditional, R=Erforderlich/Required, O=Optional, D=Abhängig von/Dependent, A=Empfohlen/Advised)

COPYRIGHT VDA 2026

Segmente

Nr	Bez	St	MaxWdh	Name
	SG3	O	1	Fiscal number
26	RFF	M	1	Fiscal number

Standard				Implementierung		
Bez	Name	St	Format	St	Format	Anwendung / Bemerkung
C506	Reference	M		M		
1153	Reference code qualifier	M	an..3	M	an..3	**FC** Fiscal number
1154	Reference identifier	C	an..70	R	an..70	In Spain, the NIF (Número de Identificación Fiscal) must be provided as the fiscal number.
1156	Document line identifier	C	an..6	N		Nicht genutzt
1056	Version identifier	C	an..9	N		Nicht genutzt
1060	Revision identifier	C	an..6	N		Nicht genutzt

Beispiel:

```
RFF+FC:ABC123'
```

Bez =Bezeichner; Nr = Laufende Segmentnummer im Guide; MaxWdh = Maximale Wiederholung; St = Status (M=Muss/Mandatory, C=Conditional, R=Erforderlich/Required, O=Optional, D=Abhängig von/Dependent, A=Empfohlen/Advised)

COPYRIGHT VDA 2026

Segmente

Nr	Bez	St	MaxWdh	Name
	SG3	O	1	VAT registration number
27	RFF	M	1	VAT registration number

Standard				Implementierung		
Bez	Name	St	Format	St	Format	Anwendung / Bemerkung
C506	Reference	M		M		
1153	Reference code qualifier	M	an..3	M	an..3	**VA** VAT registration number
1154	Reference identifier	C	an..70	R	an..70	In Spain, the NIF (Número de Identificación Fiscal) must be provided as the fiscal number.
1156	Document line identifier	C	an..6	N		Nicht genutzt
1056	Version identifier	C	an..9	N		Nicht genutzt
1060	Revision identifier	C	an..6	N		Nicht genutzt

Beispiel:

```
RFF+VA:ABC123'
```

Bez =Bezeichner; Nr = Laufende Segmentnummer im Guide; MaxWdh = Maximale Wiederholung; St = Status (M=Muss/Mandatory, C=Conditional, R=Erforderlich/Required, O=Optional, D=Abhängig von/Dependent, A=Empfohlen/Advised)

COPYRIGHT VDA 2026

Segmente

Nr	Bez	St	MaxWdh	Name
	SG4	O	1	Expedition contact
28	CTA	M	1	Expedition contact

Standard				Implementierung			
Bez	Name	St	Format	St	Format	Anwendung / Bemerkung	
3139	Contact function code	C	an..3	R	an..3	**EX** Expeditor	
C056	Contact details	C		O			
3413	Contact identifier	C	an..17	O	an..17	Identifies the department or employee by a unique identifier other than their name when given as a contact.	
3412	Contact name	C	an..256	O	an..256	Name of the contact person or department	

Information that identifies the contact person or department responsible for expedition of goods, together with information about how they can be contacted.
Beispiel:

CTA+EX+:X'

Bez =Bezeichner; Nr = Laufende Segmentnummer im Guide; MaxWdh = Maximale Wiederholung; St = Status (M=Muss/Mandatory, C=Conditional, R=Erforderlich/Required, O=Optional, D=Abhängig von/Dependent, A=Empfohlen/Advised)

COPYRIGHT VDA 2026

Segmente

Nr	Bez	St	MaxWdh	Name
	SG4	O	1	Expedition contact
29	COM	O	5	Communication contact

Standard				Implementierung		
Bez	Name	St	Format	St	Format	Anwendung / Bemerkung
C076	Communication contact	M		M		
3148	Communication address identifier	M	an..512	M	an..100	The number or virtual 'address' of a telephone in a telecommunication system The number or virtual 'address' of a telephone in an organisation's internal telecommunication system The number or virtual 'address' of a facsimile in a telecommunication system The number or virtual 'address' of an e-mail mailbox in the internet or other network. Within a given facility a detailed department mail delivery location.
3155	Communication means type code	M	an..3	M	an..3	**EM** Electronic mail **FX** Telefax **TE** Telephone

Beispiel:

```
COM+X:TE'
```

Bez =Bezeichner; Nr = Laufende Segmentnummer im Guide; MaxWdh = Maximale Wiederholung; St = Status (M=Muss/Mandatory, C=Conditional, R=Erforderlich/Required, O=Optional, D=Abhängig von/Dependent, A=Empfohlen/Advised)

COPYRIGHT VDA 2026

Segmente

Nr	Bez	St	MaxWdh	Name
	SG4	O	1	Information contact
30	CTA	M	1	Information contact

Standard				Implementierung			
Bez	Name	St	Format	St	Format	Anwendung / Bemerkung	
3139	Contact function code	C	an..3	R	an..3	**IC** Information contact	
C056	Contact details	C		O			
3413	Contact identifier	C	an..17	O	an..17	Identifies the department or employee by a unique identifier other than their name when given as a contact.	
3412	Contact name	C	an..256	O	an..35	Name of the contact person or department	

Information that identifies the contact person or department on general matters, together with information about how they can be contacted.
Beispiel:

CTA+IC+:X'

Bez =Bezeichner; Nr = Laufende Segmentnummer im Guide; MaxWdh = Maximale Wiederholung; St = Status (M=Muss/Mandatory, C=Conditional, R=Erforderlich/Required, O=Optional, D=Abhängig von/Dependent, A=Empfohlen/Advised)

COPYRIGHT VDA 2026

Segmente

Nr	Bez	St	MaxWdh	Name
	SG4	O	1	Information contact
31	COM	O	5	Communication contact

Standard				Implementierung		
Bez	Name	St	Format	St	Format	Anwendung / Bemerkung
C076	Communication contact	M		M		
3148	Communication address identifier	M	an..512	R	an..100	The number or virtual 'address' of a telephone in a telecommunication system The number or virtual 'address' of a telephone in an organisation's internal telecommunication system The number or virtual 'address' of a facsimile in a telecommunication system The number or virtual 'address' of an e-mail mailbox in the internet or other network. Within a given facility a detailed department mail delivery location.
3155	Communication means type code	M	an..3	M	an..3	**EM** Electronic mail **FX** Telefax **TE** Telephone

Beispiel:

```
COM+X:TE'
```

Bez =Bezeichner; Nr = Laufende Segmentnummer im Guide; MaxWdh = Maximale Wiederholung; St = Status (M=Muss/Mandatory, C=Conditional, R=Erforderlich/Required, O=Optional, D=Abhängig von/Dependent, A=Empfohlen/Advised)

COPYRIGHT VDA 2026

Segmente

Nr	Bez	St	MaxWdh	Name
	SG2	R	1	Ship to
32	NAD	M	1	ShipTo's name and address

Standard				Implementierung		
Bez	Name	St	Format	St	Format	Anwendung / Bemerkung
3035	Party function code qualifier	M	an..3	M	an..3	**ST** Ship to
C082	Party identification details	C		R		
3039	Party identifier	M	an..35	R	an..20	Party or Plant ID.
1131	Code list identification code	C	an..17	N		Nicht genutzt
3055	Code list responsible agency code	C	an..3	R	an..3	Code specifying the agency responsible for a code list. **10** ODETTE **16** US, D&B (Dun & Bradstreet Corporation) **91** Assigned by seller or seller's agent **92** Assigned by buyer or buyer's agent
C058	Name and address	C		N		Nicht genutzt
3124	Name and address description	M	an..35	N		Nicht genutzt
3124	Name and address description	C	an..35	N		Nicht genutzt
3124	Name and address description	C	an..35	N		Nicht genutzt
3124	Name and address description	C	an..35	N		Nicht genutzt
3124	Name and address description	C	an..35	N		Nicht genutzt
C080	Party name	C		O		
3036	Party name	M	an..70	M	an..35	Single text line for specification of a name
3036	Party name	C	an..70	O	an..35	Single text line for specification of a name
3036	Party name	C	an..70	N		Nicht genutzt
3036	Party name	C	an..70	N		Nicht genutzt
3036	Party name	C	an..70	N		Nicht genutzt
3045	Party name format code	C	an..3	N		Nicht genutzt
C059	Street	C		O		
3042	Street and number or post office box identifier	M	an..256	M	an..35	The name that identifies the location of a house or building: usually within a street as part of an address.
3042	Street and number or post office box identifier	C	an..256	O	an..35	
3042	Street and number or post office box identifier	C	an..256	N		Nicht genutzt
3042	Street and number or post office box identifier	C	an..256	N		Nicht genutzt
3164	City name	C	an..35	O	an..35	The name of the city, town, or village of this address.
C819	Country subdivision details	C		O		
3229	Country subdivision identifier	C	an..9	R	an..9	State or region within a country. The use of UN LoCodes is recommended.
1131	Code list identification code	C	an..17	N		Nicht genutzt
3055	Code list responsible agency code	C	an..3	N		Nicht genutzt
3228	Country subdivision name	C	an..70	N		Nicht genutzt
3251	Postal identification code	C	an..17	O	an..17	The identifier for one or more properties according to the postal service of that country; a group of letters and/or numbers added to the postal address to assist in the sorting

Bez =Bezeichner; Nr = Laufende Segmentnummer im Guide; MaxWdh = Maximale Wiederholung; St = Status (M=Muss/Mandatory, C=Conditional, R=Erforderlich/Required, O=Optional, D=Abhängig von/Dependent, A=Empfohlen/Advised)

COPYRIGHT VDA 2026

Segmente

Standard				Implementierung		
Bez	Name	St	Format	St	Format	Anwendung / Bemerkung
						of mail.
3207	Country identifier	C	an..3	O	a2	Provides the country part of an address using a code. Use ISO3166 two alpha code. The codes of this code list are documented in a separate document

The party to which goods are to be shipped (consigned).
In most cases it will be sufficient to use C082 for identification of invoicee. If not, either C058 (unstructured address) or C080 and following data elements should be used (structured address). The preferred version is the structured address.
Beispiel:

NAD+ST+X::10++X:X+X:X++++DE'

Bez =Bezeichner; Nr = Laufende Segmentnummer im Guide; MaxWdh = Maximale Wiederholung; St = Status (M=Muss/Mandatory, C=Conditional, R=Erforderlich/Required, O=Optional, D=Abhängig von/Dependent, A=Empfohlen/Advised)

COPYRIGHT VDA 2026

Segmente

Nr	Bez	St	MaxWdh	Name
	SG2	R	1	Ship to
33	LOC	O	3	Place of discharge

Standard					Implementierung		
Bez	Name	St	Format		St	Format	Anwendung / Bemerkung
3227	Location function code qualifier	M	an..3		M	an..3	**7** Place of delivery **11** Place of discharge **13** Place of transhipment
C517	Location identification	C			C		
3225	Location identifier	C	an..35		O	an..35	Identifier of location, site, etc.
1131	Code list identification code	C	an..17		N		Nicht genutzt
3055	Code list responsible agency code	C	an..3		N		Nicht genutzt
3224	Location name	C	an..256		O	an..256	Name of place/location; if necessary, use complete address.
C519	Related location one identification	C			N		Nicht genutzt
3223	First related location identifier	C	an..35		N		Nicht genutzt
1131	Code list identification code	C	an..17		N		Nicht genutzt
3055	Code list responsible agency code	C	an..3		N		Nicht genutzt
3222	First related location name	C	an..70		N		Nicht genutzt
C553	Related location two identification	C			O		
3233	Second related location identifier	C	an..35		O	an..35	Additional location ID
1131	Code list identification code	C	an..17		N		Nicht genutzt
3055	Code list responsible agency code	C	an..3		D	an..3	Code specifying the agency responsible for a code list. Has to be provided if 3233 is used. **10** ODETTE **16** US, D&B (Dun & Bradstreet Corporation) **91** Assigned by seller or seller's agent **92** Assigned by buyer or buyer's agent
3232	Second related location name	C	an..70		O	an..70	Additional location text
5479	Relation code	C	an..3		N		Nicht genutzt

Beispiel:

```
LOC+11+X:::X++:::X'
```

Bez =Bezeichner; Nr = Laufende Segmentnummer im Guide; MaxWdh = Maximale Wiederholung; St = Status (M=Muss/Mandatory, C=Conditional, R=Erforderlich/Required, O=Optional, D=Abhängig von/Dependent, A=Empfohlen/Advised)

COPYRIGHT VDA 2026

Segmente

Nr	Bez	St	MaxWdh	Name
	SG2	R	1	Ship to
34	LOC	O	1	Place of transshipment

Standard				Implementierung		
Bez	Name	St	Format	St	Format	Anwendung / Bemerkung
3227	Location function code qualifier	M	an..3	M	an..3	**13** Place of transhipment
C517	Location identification	C		R		
3225	Location identifier	C	an..35	O	an..35	Identifier of location, site, etc.
1131	Code list identification code	C	an..17	N		Nicht genutzt
3055	Code list responsible agency code	C	an..3	O	an..3	**92** Assigned by buyer or buyer's agent
3224	Location name	C	an..256	O	an..256	Name of place/location; if necessary, use complete address.
C519	Related location one identification	C		N		Nicht genutzt
3223	First related location identifier	C	an..35	N		Nicht genutzt
1131	Code list identification code	C	an..17	N		Nicht genutzt
3055	Code list responsible agency code	C	an..3	N		Nicht genutzt
3222	First related location name	C	an..70	N		Nicht genutzt
C553	Related location two identification	C		O		
3233	Second related location identifier	C	an..35	O	an..35	Additional location ID
1131	Code list identification code	C	an..17	N		Nicht genutzt
3055	Code list responsible agency code	C	an..3	D	an..3	Code specifying the agency responsible for a code list. Has to be provided if 3233 is used. **10** ODETTE **16** US, D&B (Dun & Bradstreet Corporation) **91** Assigned by seller or seller's agent **92** Assigned by buyer or buyer's agent
3232	Second related location name	C	an..70	O	an..70	Additional location text
5479	Relation code	C	an..3	N		Nicht genutzt

For shipments divided into preliminary and main shipment, this location identifies the point of transfer between these shipment steps. The date/time (requested delivery date) refers however to the final unloading point.
Beispiel:

```
LOC+13+Umschlagspunkt Id::92:Umschlagspunkt++:::X'
```

Bez =Bezeichner; Nr = Laufende Segmentnummer im Guide; MaxWdh = Maximale Wiederholung; St = Status (M=Muss/Mandatory, C=Conditional, R=Erforderlich/Required, O=Optional, D=Abhängig von/Dependent, A=Empfohlen/Advised)

COPYRIGHT VDA 2026

Segmente

Nr	Bez	St	MaxWdh	Name
	SG3	O	1	Additional Party ID (DUNS)
35	RFF	M	1	Reference

Standard				Implementierung		
Bez	Name	St	Format	St	Format	Anwendung / Bemerkung
C506	Reference	M		M		
1153	Reference code qualifier	M	an..3	M	an..3	**ANK** Reference number assigned by third party
1154	Reference identifier	C	an..70	R	an..17	DUNS number
1156	Document line identifier	C	an..6	N		Nicht genutzt
1056	Version identifier	C	an..9	N		Nicht genutzt
1060	Revision identifier	C	an..6	N		Nicht genutzt

This segment can be used to transmit the DUNS number of the business partner, in addition to the customer number or the supplier number.
Beispiel:

RFF+ANK:X'

Bez =Bezeichner; Nr = Laufende Segmentnummer im Guide; MaxWdh = Maximale Wiederholung; St = Status (M=Muss/Mandatory, C=Conditional, R=Erforderlich/Required, O=Optional, D=Abhängig von/Dependent, A=Empfohlen/Advised)

COPYRIGHT VDA 2026

Segmente

Nr	Bez	St	MaxWdh	Name
	SG3	O	1	Additional party ID - plant number
36	RFF	M	1	Additional party ID - plant number

Standard				Implementierung			
Bez	Name	St	Format	St	Format	Anwendung / Bemerkung
C506	Reference	M		M		
1153	Reference code qualifier	M	an..3	M	an..3	**PE** Plant number
1154	Reference identifier	C	an..70	R	an..70	Additional party ID - plant number
1156	Document line identifier	C	an..6	N		Nicht genutzt
1056	Version identifier	C	an..9	N		Nicht genutzt
1060	Revision identifier	C	an..6	N		Nicht genutzt

Beispiel:

```
RFF+PE:12345'
```

Bez =Bezeichner; Nr = Laufende Segmentnummer im Guide; MaxWdh = Maximale Wiederholung; St = Status (M=Muss/Mandatory, C=Conditional, R=Erforderlich/Required, O=Optional, D=Abhängig von/Dependent, A=Empfohlen/Advised)

COPYRIGHT VDA 2026

Segmente

Nr	Bez	St	MaxWdh	Name
	SG3	O	1	Fiscal number
37	RFF	M	1	Fiscal number

Standard				Implementierung		
Bez	Name	St	Format	St	Format	Anwendung / Bemerkung
C506	Reference	M		M		
1153	Reference code qualifier	M	an..3	M	an..3	**FC** Fiscal number
1154	Reference identifier	C	an..70	R	an..70	In Spain, the NIF (Número de Identificación Fiscal) must be provided as the fiscal number.
1156	Document line identifier	C	an..6	N		Nicht genutzt
1056	Version identifier	C	an..9	N		Nicht genutzt
1060	Revision identifier	C	an..6	N		Nicht genutzt

Beispiel:

```
RFF+FC:ABC123'
```

Bez =Bezeichner; Nr = Laufende Segmentnummer im Guide; MaxWdh = Maximale Wiederholung; St = Status (M=Muss/Mandatory, C=Conditional, R=Erforderlich/Required, O=Optional, D=Abhängig von/Dependent, A=Empfohlen/Advised)

COPYRIGHT VDA 2026

Segmente

Nr	Bez	St	MaxWdh	Name
	SG3	O	1	VAT registration number
38	RFF	M	1	VAT registration number

Standard				Implementierung		
Bez	Name	St	Format	St	Format	Anwendung / Bemerkung
C506	Reference	M		M		
1153	Reference code qualifier	M	an..3	M	an..3	**VA** VAT registration number
1154	Reference identifier	C	an..70	R	an..70	In Spain, the NIF (Número de Identificación Fiscal) must be provided as the fiscal number.
1156	Document line identifier	C	an..6	N		Nicht genutzt
1056	Version identifier	C	an..9	N		Nicht genutzt
1060	Revision identifier	C	an..6	N		Nicht genutzt

Beispiel:

RFF+VA:ABC123'

Bez =Bezeichner; Nr = Laufende Segmentnummer im Guide; MaxWdh = Maximale Wiederholung; St = Status (M=Muss/Mandatory, C=Conditional, R=Erforderlich/Required, O=Optional, D=Abhängig von/Dependent, A=Empfohlen/Advised)

COPYRIGHT VDA 2026

Segmente

Nr	Bez	St	MaxWdh	Name
	SG2	O	1	Buyer
		Party to whom merchandise and/or service is sold.		
39	NAD	M	1	Buyer's name and address

Standard				Implementierung		
Bez	Name	St	Format	St	Format	Anwendung / Bemerkung
3035	Party function code qualifier	M	an..3	M	an..3	**BY** Buyer
C082	Party identification details	C		R		
3039	Party identifier	M	an..35	M	an..35	Unique identification of a party by an ID.
1131	Code list identification code	C	an..17	N		Nicht genutzt
3055	Code list responsible agency code	C	an..3	R	an..3	Code specifying the agency responsible for a code list. **10** ODETTE **16** US, D&B (Dun & Bradstreet Corporation) **91** Assigned by seller or seller's agent **92** Assigned by buyer or buyer's agent
C058	Name and address	C		N		Nicht genutzt
3124	Name and address description	M	an..35	N		Nicht genutzt
3124	Name and address description	C	an..35	N		Nicht genutzt
3124	Name and address description	C	an..35	N		Nicht genutzt
3124	Name and address description	C	an..35	N		Nicht genutzt
3124	Name and address description	C	an..35	N		Nicht genutzt
C080	Party name	C		O		
3036	Party name	M	an..70	M	an..35	Single text line for specification of a name
3036	Party name	C	an..70	O	an..35	see 3036 # 1
3036	Party name	C	an..70	N		Nicht genutzt
3036	Party name	C	an..70	N		Nicht genutzt
3036	Party name	C	an..70	N		Nicht genutzt
3045	Party name format code	C	an..3	N		Nicht genutzt
C059	Street	C		O		
3042	Street and number or post office box identifier	M	an..256	M	an..35	The name that identifies the location of a house or building: usually within a street as part of an address.
3042	Street and number or post office box identifier	C	an..256	O	an..35	
3042	Street and number or post office box identifier	C	an..256	N		Nicht genutzt
3042	Street and number or post office box identifier	C	an..256	N		Nicht genutzt
3164	City name	C	an..35	O	an..35	The name of the city, town, or village of this address.
C819	Country subdivision details	C		O		
3229	Country subdivision identifier	C	an..9	R	an..9	State or region within a country. The use of UN LoCodes is recommended.
1131	Code list identification code	C	an..17	N		Nicht genutzt
3055	Code list responsible agency code	C	an..3	N		Nicht genutzt
3228	Country subdivision name	C	an..70	N		Nicht genutzt
3251	Postal identification code	C	an..17	O	an..17	The identifier for one or more properties according to the postal service of that country; a group of letters and/or

Bez =Bezeichner; Nr = Laufende Segmentnummer im Guide; MaxWdh = Maximale Wiederholung; St = Status (M=Muss/Mandatory, C=Conditional, R=Erforderlich/Required, O=Optional, D=Abhängig von/Dependent, A=Empfohlen/Advised)

COPYRIGHT VDA 2026

Segmente

Standard				Implementierung		
Bez	Name	St	Format	St	Format	Anwendung / Bemerkung
						numbers added to the postal address to assist in the sorting of mail.
3207	Country identifier	C	an..3	O	an..3	Provides the country part of an address using a code. Use ISO3166 two alpha code.

In most cases it will be sufficient to use C082 for identification of invoicee. If not, either C058 (unstructured address) or C080 and following data elements should be used (structured address). The preferred version is the structured address.
Beispiel:

NAD+BY+X::10++X:X+X:X++++DE'

Bez =Bezeichner; Nr = Laufende Segmentnummer im Guide; MaxWdh = Maximale Wiederholung; St = Status (M=Muss/Mandatory, C=Conditional, R=Erforderlich/Required, O=Optional, D=Abhängig von/Dependent, A=Empfohlen/Advised)

COPYRIGHT VDA 2026

Segmente

Nr	Bez	St	MaxWdh	Name
	SG3	O	1	Additional Party ID (DUNS)
40	RFF	M	1	Reference

Standard				Implementierung		
Bez	Name	St	Format	St	Format	Anwendung / Bemerkung
C506	Reference	M		M		
1153	Reference code qualifier	M	an..3	M	an..3	**ANK** Reference number assigned by third party
1154	Reference identifier	C	an..70	R	an..17	DUNS number
1156	Document line identifier	C	an..6	N		Nicht genutzt
1056	Version identifier	C	an..9	N		Nicht genutzt
1060	Revision identifier	C	an..6	N		Nicht genutzt

This segment can be used to transmit the DUNS number of the business partner, in addition to the customer number or the supplier number.
Beispiel:

RFF+ANK:X'

Bez =Bezeichner; Nr = Laufende Segmentnummer im Guide; MaxWdh = Maximale Wiederholung; St = Status (M=Muss/Mandatory, C=Conditional, R=Erforderlich/Required, O=Optional, D=Abhängig von/Dependent, A=Empfohlen/Advised)

COPYRIGHT VDA 2026

Segmente

Nr	Bez	St	MaxWdh	Name
	SG3	O	1	Fiscal number
41	RFF	M	1	Fiscal number

Standard				Implementierung		
Bez	Name	St	Format	St	Format	Anwendung / Bemerkung
C506	Reference	M		M		
1153	Reference code qualifier	M	an..3	M	an..3	**FC** Fiscal number
1154	Reference identifier	C	an..70	R	an..70	In Spain, the NIF (Número de Identificación Fiscal) must be provided as the fiscal number.
1156	Document line identifier	C	an..6	N		Nicht genutzt
1056	Version identifier	C	an..9	N		Nicht genutzt
1060	Revision identifier	C	an..6	N		Nicht genutzt

Beispiel:

```
RFF+FC:ABC123'
```

Bez =Bezeichner; Nr = Laufende Segmentnummer im Guide; MaxWdh = Maximale Wiederholung; St = Status (M=Muss/Mandatory, C=Conditional, R=Erforderlich/Required, O=Optional, D=Abhängig von/Dependent, A=Empfohlen/Advised)

COPYRIGHT VDA 2026

Segmente

Nr	Bez	St	MaxWdh	Name
	SG3	O	1	VAT registration number
42	RFF	M	1	VAT registration number

Standard				Implementierung		
Bez	Name	St	Format	St	Format	Anwendung / Bemerkung
C506	Reference	M		M		
1153	Reference code qualifier	M	an..3	M	an..3	**VA** VAT registration number
1154	Reference identifier	C	an..70	R	an..70	In Spain, the NIF (Número de Identificación Fiscal) must be provided as the fiscal number.
1156	Document line identifier	C	an..6	N		Nicht genutzt
1056	Version identifier	C	an..9	N		Nicht genutzt
1060	Revision identifier	C	an..6	N		Nicht genutzt

Beispiel:

RFF+VA:ABC123'

Bez =Bezeichner; Nr = Laufende Segmentnummer im Guide; MaxWdh = Maximale Wiederholung; St = Status (M=Muss/Mandatory, C=Conditional, R=Erforderlich/Required, O=Optional, D=Abhängig von/Dependent, A=Empfohlen/Advised)

COPYRIGHT VDA 2026

Segmente

Nr	Bez	St	MaxWdh	Name
	SG2	O	1	Ultimate Customer Party
43	NAD	M	1	Ultimate customers's name and address

Standard					Implementierung		
Bez	Name	St	Format		St	Format	Anwendung / Bemerkung
3035	Party function code qualifier	M	an..3		M	an..3	**UD** Ultimate customer
C082	Party identification details	C			O		
3039	Party identifier	M	an..35		M	an..35	Unique identifier of business partner (customer number, supplier number, DUNS number, etc.).
1131	Code list identification code	C	an..17		N		Nicht genutzt
3055	Code list responsible agency code	C	an..3		R	an..3	Code specifying the agency responsible for a code list. **16** US, D&B (Dun & Bradstreet Corporation) **86** Assigned by party originating the message **91** Assigned by seller or seller's agent **92** Assigned by buyer or buyer's agent
C058	Name and address	C			N		Nicht genutzt
3124	Name and address description	M	an..35		N		Nicht genutzt
3124	Name and address description	C	an..35		N		Nicht genutzt
3124	Name and address description	C	an..35		N		Nicht genutzt
3124	Name and address description	C	an..35		N		Nicht genutzt
3124	Name and address description	C	an..35		N		Nicht genutzt
C080	Party name	C			O		
3036	Party name	M	an..70		M	an..35	Single text line for specification of a name
3036	Party name	C	an..70		O	an..35	Single text line for specification of a name
3036	Party name	C	an..70		N		Nicht genutzt
3036	Party name	C	an..70		N		Nicht genutzt
3036	Party name	C	an..70		N		Nicht genutzt
3045	Party name format code	C	an..3		N		Nicht genutzt
C059	Street	C			O		
3042	Street and number or post office box identifier	M	an..256		M	an..35	Part of address identifying the location of a building, normally given together with street
3042	Street and number or post office box identifier	C	an..256		O	an..35	see 3042 # 1
3042	Street and number or post office box identifier	C	an..256		N		Nicht genutzt
3042	Street and number or post office box identifier	C	an..256		N		Nicht genutzt
3164	City name	C	an..35		O	an..35	
C819	Country subdivision details	C			O		
3229	Country subdivision identifier	C	an..9		O	an..9	State or region within a country. The use of UN LoCodes is recommended.
1131	Code list identification code	C	an..17		N		Nicht genutzt
3055	Code list responsible agency code	C	an..3		N		Nicht genutzt
3228	Country subdivision name	C	an..70		N		Nicht genutzt
3251	Postal identification code	C	an..17		O	an..17	Identifier of one or more address data properties according to the postal service of the respective country

Bez =Bezeichner; Nr = Laufende Segmentnummer im Guide; MaxWdh = Maximale Wiederholung; St = Status (M=Muss/Mandatory, C=Conditional, R=Erforderlich/Required, O=Optional, D=Abhängig von/Dependent, A=Empfohlen/Advised)

COPYRIGHT VDA 2026

Segmente

Standard				Implementierung		
Bez	Name	St	Format	St	Format	Anwendung / Bemerkung
3207	Country identifier	C	an..3	O	an..3	Provides the country part of an address using a code. Use ISO3166 two alpha code.

This segment is required for example in CKD processes or cog wheel process.
The ultimate customer is the final recipient of the goods. For a multi-tier scheduled shipment, it might be necessary to distinguish between the ship-from (e.g. tier 2 supplier), the ship-to (e.g. tier 1 supplier) and the ultimate customer (e.g. OEM's plant or dealer).
Beispiel:

```
NAD+UD+Identifier::92++Name1:Name2+Street1:Street2+City++12345+DE'
```

Bez =Bezeichner; Nr = Laufende Segmentnummer im Guide; MaxWdh = Maximale Wiederholung; St = Status (M=Muss/Mandatory, C=Conditional, R=Erforderlich/Required, O=Optional, D=Abhängig von/Dependent, A=Empfohlen/Advised)

COPYRIGHT VDA 2026

Segmente

Nr	Bez	St	MaxWdh	Name
	SG3	O	1	Fiscal number
44	RFF	M	1	Fiscal number

Standard				Implementierung		
Bez	Name	St	Format	St	Format	Anwendung / Bemerkung
C506	Reference	M		M		
1153	Reference code qualifier	M	an..3	M	an..3	**FC** Fiscal number
1154	Reference identifier	C	an..70	R	an..70	In Spain, the NIF (Número de Identificación Fiscal) must be provided as the fiscal number.
1156	Document line identifier	C	an..6	N		Nicht genutzt
1056	Version identifier	C	an..9	N		Nicht genutzt
1060	Revision identifier	C	an..6	N		Nicht genutzt

Beispiel:

```
RFF+FC:ABC123'
```

Bez =Bezeichner; Nr = Laufende Segmentnummer im Guide; MaxWdh = Maximale Wiederholung; St = Status (M=Muss/Mandatory, C=Conditional, R=Erforderlich/Required, O=Optional, D=Abhängig von/Dependent, A=Empfohlen/Advised)

COPYRIGHT VDA 2026

Segmente

Nr	Bez	St	MaxWdh	Name
	SG3	O	1	VAT registration number
45	RFF	M	1	VAT registration number

Standard				Implementierung		
Bez	Name	St	Format	St	Format	Anwendung / Bemerkung
C506	Reference	M		M		
1153	Reference code qualifier	M	an..3	M	an..3	**VA** VAT registration number
1154	Reference identifier	C	an..70	R	an..70	In Spain, the NIF (Número de Identificación Fiscal) must be provided as the fiscal number.
1156	Document line identifier	C	an..6	N		Nicht genutzt
1056	Version identifier	C	an..9	N		Nicht genutzt
1060	Revision identifier	C	an..6	N		Nicht genutzt

Beispiel:

RFF+VA:ABC123'

Bez =Bezeichner; Nr = Laufende Segmentnummer im Guide; MaxWdh = Maximale Wiederholung; St = Status (M=Muss/Mandatory, C=Conditional, R=Erforderlich/Required, O=Optional, D=Abhängig von/Dependent, A=Empfohlen/Advised)

COPYRIGHT VDA 2026

Segmente

Nr	Bez	St	MaxWdh	Name
	SG2	O	1	Seller / Supplier
46	NAD	M	1	Seller's name and address

Standard				Implementierung		
Bez	Name	St	Format	St	Format	Anwendung / Bemerkung
3035	Party function code qualifier	M	an..3	M	an..3	**SE** Seller
C082	Party identification details	C		R		
3039	Party identifier	M	an..35	M	an..35	Unique identification of a party by an ID.
1131	Code list identification code	C	an..17	N		Nicht genutzt
3055	Code list responsible agency code	C	an..3	R	an..3	Code specifying the agency responsible for a code list. **10** ODETTE **16** US, D&B (Dun & Bradstreet Corporation) **91** Assigned by seller or seller's agent **92** Assigned by buyer or buyer's agent
C058	Name and address	C		N		Nicht genutzt
3124	Name and address description	M	an..35	N		Nicht genutzt
3124	Name and address description	C	an..35	N		Nicht genutzt
3124	Name and address description	C	an..35	N		Nicht genutzt
3124	Name and address description	C	an..35	N		Nicht genutzt
3124	Name and address description	C	an..35	N		Nicht genutzt
C080	Party name	C		O		
3036	Party name	M	an..70	M	an..35	Single text line for specification of a name
3036	Party name	C	an..70	O	an..35	see 3036 # 1
3036	Party name	C	an..70	N		Nicht genutzt
3036	Party name	C	an..70	N		Nicht genutzt
3036	Party name	C	an..70	N		Nicht genutzt
3045	Party name format code	C	an..3	N		Nicht genutzt
C059	Street	C		O		
3042	Street and number or post office box identifier	M	an..256	M	an..35	The name that identifies the location of a house or building: usually within a street as part of an address.
3042	Street and number or post office box identifier	C	an..256	O	an..35	see 3042 # 1
3042	Street and number or post office box identifier	C	an..256	N		Nicht genutzt
3042	Street and number or post office box identifier	C	an..256	N		Nicht genutzt
3164	City name	C	an..35	O	an..35	The name of the city, town, or village of this address.
C819	Country subdivision details	C		O		
3229	Country subdivision identifier	C	an..9	R	an..9	State or region within a country. The use of UN LoCodes is recommended.
1131	Code list identification code	C	an..17	N		Nicht genutzt
3055	Code list responsible agency code	C	an..3	N		Nicht genutzt
3228	Country subdivision name	C	an..70	N		Nicht genutzt
3251	Postal identification code	C	an..17	O	an..17	The identifier for one or more properties according to the postal service of that country; a group of letters and/or numbers added to the postal address to assist in the sorting

Bez =Bezeichner; Nr = Laufende Segmentnummer im Guide; MaxWdh = Maximale Wiederholung; St = Status (M=Muss/Mandatory, C=Conditional, R=Erforderlich/Required, O=Optional, D=Abhängig von/Dependent, A=Empfohlen/Advised)

COPYRIGHT VDA 2026

Segmente

Standard				Implementierung		
Bez	Name	St	Format	St	Format	Anwendung / Bemerkung
						of mail.
3207	Country identifier	C	an..3	O	a2	Provides the country part of an address using a code. Use ISO3166 two alpha code.

Party selling merchandise to a buyer.
In most cases it will be sufficient to use C082 for identification of invoicee. If not, either C058 (unstructured address) or C080 and following data elements should be used (structured address). The preferred version is the structured address.
Beispiel:

NAD+SE+X::10++X:X+X:X++++DE'

Bez =Bezeichner; Nr = Laufende Segmentnummer im Guide; MaxWdh = Maximale Wiederholung; St = Status (M=Muss/Mandatory, C=Conditional, R=Erforderlich/Required, O=Optional, D=Abhängig von/Dependent, A=Empfohlen/Advised)

COPYRIGHT VDA 2026

Segmente

Nr	Bez	St	MaxWdh	Name
	SG3	O	1	Additional Party ID (DUNS)
47	RFF	M	1	Reference

Standard				Implementierung		
Bez	Name	St	Format	St	Format	Anwendung / Bemerkung
C506	Reference	M		M		
1153	Reference code qualifier	M	an..3	M	an..3	**ANK** Reference number assigned by third party
1154	Reference identifier	C	an..70	R	an..70	DUNS number
1156	Document line identifier	C	an..6	N		Nicht genutzt
1056	Version identifier	C	an..9	N		Nicht genutzt
1060	Revision identifier	C	an..6	N		Nicht genutzt

This segment can be used to transmit the DUNS number of the business partner, in addition to the customer number or the supplier number.
Beispiel:

RFF+ANK:X'

Bez =Bezeichner; Nr = Laufende Segmentnummer im Guide; MaxWdh = Maximale Wiederholung; St = Status (M=Muss/Mandatory, C=Conditional, R=Erforderlich/Required, O=Optional, D=Abhängig von/Dependent, A=Empfohlen/Advised)

COPYRIGHT VDA 2026

Segmente

Nr	Bez	St	MaxWdh	Name
	SG3	O	1	Fiscal number
48	RFF	M	1	Fiscal number

Standard				Implementierung		
Bez	Name	St	Format	St	Format	Anwendung / Bemerkung
C506	Reference	M		M		
1153	Reference code qualifier	M	an..3	M	an..3	**FC** Fiscal number
1154	Reference identifier	C	an..70	R	an..70	In Spain, the NIF (Número de Identificación Fiscal) must be provided as the fiscal number.
1156	Document line identifier	C	an..6	N		Nicht genutzt
1056	Version identifier	C	an..9	N		Nicht genutzt
1060	Revision identifier	C	an..6	N		Nicht genutzt

Beispiel:

```
RFF+FC:ABC123'
```

Bez =Bezeichner; Nr = Laufende Segmentnummer im Guide; MaxWdh = Maximale Wiederholung; St = Status (M=Muss/Mandatory, C=Conditional, R=Erforderlich/Required, O=Optional, D=Abhängig von/Dependent, A=Empfohlen/Advised)

COPYRIGHT VDA 2026

Segmente

Nr	Bez	St	MaxWdh	Name
	SG3	O	1	VAT registration number
49	RFF	M	1	VAT registration number

Standard				Implementierung		
Bez	Name	St	Format	St	Format	Anwendung / Bemerkung
C506	Reference	M		M		
1153	Reference code qualifier	M	an..3	M	an..3	**VA** VAT registration number
1154	Reference identifier	C	an..70	R	an..70	In Spain, the NIF (Número de Identificación Fiscal) must be provided as the fiscal number.
1156	Document line identifier	C	an..6	N		Nicht genutzt
1056	Version identifier	C	an..9	N		Nicht genutzt
1060	Revision identifier	C	an..6	N		Nicht genutzt

Beispiel:

```
RFF+VA:ABC123'
```

Bez =Bezeichner; Nr = Laufende Segmentnummer im Guide; MaxWdh = Maximale Wiederholung; St = Status (M=Muss/Mandatory, C=Conditional, R=Erforderlich/Required, O=Optional, D=Abhängig von/Dependent, A=Empfohlen/Advised)

COPYRIGHT VDA 2026

Segmente

Nr	Bez	St	MaxWdh	Name
	SG2	R	1	Freight forwarder
50	NAD	M	1	Freight forwarder's name and address

Standard					Implementierung			
Bez	Name	St	Format		St	Format	Anwendung / Bemerkung	
3035	Party function code qualifier	M	an..3		M	an..3	**FW** Freight forwarder	
C082	Party identification details	C			R			
3039	Party identifier	M	an..35		R	an..35	Unique identification of a party by an ID.	
1131	Code list identification code	C	an..17		N		Nicht genutzt	
3055	Code list responsible agency code	C	an..3		R	an..3	Code specifying the agency responsible for a code list. **10** ODETTE **16** US, D&B (Dun & Bradstreet Corporation) **91** Assigned by seller or seller's agent **92** Assigned by buyer or buyer's agent	
C058	Name and address	C			N		Nicht genutzt	
3124	Name and address description	M	an..35		N		Nicht genutzt	
3124	Name and address description	C	an..35		N		Nicht genutzt	
3124	Name and address description	C	an..35		N		Nicht genutzt	
3124	Name and address description	C	an..35		N		Nicht genutzt	
3124	Name and address description	C	an..35		N		Nicht genutzt	
C080	Party name	C			O			
3036	Party name	M	an..70		M	an..35	Freight Forwarder's Name Single text line for specification of a name	
3036	Party name	C	an..70		O	an..35	see 3036 # 1	
3036	Party name	C	an..70		N		Nicht genutzt	
3036	Party name	C	an..70		N		Nicht genutzt	
3036	Party name	C	an..70		N		Nicht genutzt	
3045	Party name format code	C	an..3		N		Nicht genutzt	
C059	Street	C			O			
3042	Street and number or post office box identifier	M	an..256		M	an..35	The name that identifies the location of a house or building: usually within a street as part of an address.	
3042	Street and number or post office box identifier	C	an..256		O	an..35	see 3042 # 1	
3042	Street and number or post office box identifier	C	an..256		N		Nicht genutzt	
3042	Street and number or post office box identifier	C	an..256		N		Nicht genutzt	
3164	City name	C	an..35		O	an..35	The name of the city, town, or village of this address.	
C819	Country subdivision details	C			O			
3229	Country subdivision identifier	C	an..9		R	an..9	State or region within a country. The use of UN LoCodes is recommended.	
1131	Code list identification code	C	an..17		N		Nicht genutzt	
3055	Code list responsible agency code	C	an..3		N		Nicht genutzt	
3228	Country subdivision name	C	an..70		N		Nicht genutzt	
3251	Postal identification code	C	an..17		O	an..17	The identifier for one or more properties according to the postal service of that country; a group of letters and/or	

Bez =Bezeichner; Nr = Laufende Segmentnummer im Guide; MaxWdh = Maximale Wiederholung; St = Status (M=Muss/Mandatory, C=Conditional, R=Erforderlich/Required, O=Optional, D=Abhängig von/Dependent, A=Empfohlen/Advised)

COPYRIGHT VDA 2026

Segmente

Standard				Implementierung		
Bez	Name	St	Format	St	Format	Anwendung / Bemerkung
						numbers added to the postal address to assist in the sorting of mail.
3207	Country identifier	C	an..3	O	a2	Provides the country part of an address using a code. Use ISO3166 two alpha code.

In most cases it will be sufficient to use C082 for identification of invoicee. If not, either C058 (unstructured address) or C080 and following data elements should be used (structured address). The preferred version is the structured address.
Beispiel:

NAD+FW+X::10++X:X+X:X++++DE'

Bez =Bezeichner; Nr = Laufende Segmentnummer im Guide; MaxWdh = Maximale Wiederholung; St = Status (M=Muss/Mandatory, C=Conditional, R=Erforderlich/Required, O=Optional, D=Abhängig von/Dependent, A=Empfohlen/Advised)

COPYRIGHT VDA 2026

Segmente

Nr	Bez	St	MaxWdh	Name
	SG3	O	1	Additional Party ID (DUNS)
51	RFF	M	1	Reference

Standard				Implementierung		
Bez	Name	St	Format	St	Format	Anwendung / Bemerkung
C506	Reference	M		M		
1153	Reference code qualifier	M	an..3	M	an..3	**ANK** Reference number assigned by third party
1154	Reference identifier	C	an..70	R	an..70	DUNS number
1156	Document line identifier	C	an..6	N		Nicht genutzt
1056	Version identifier	C	an..9	N		Nicht genutzt
1060	Revision identifier	C	an..6	N		Nicht genutzt

This segment can be used to transmit the DUNS number of the business partner, in addition to the customer number or the supplier number.
Beispiel:

RFF+ANK:X'

Bez =Bezeichner; Nr = Laufende Segmentnummer im Guide; MaxWdh = Maximale Wiederholung; St = Status (M=Muss/Mandatory, C=Conditional, R=Erforderlich/Required, O=Optional, D=Abhängig von/Dependent, A=Empfohlen/Advised)

COPYRIGHT VDA 2026

Segmente

Nr	Bez	St	MaxWdh	Name
	SG3	O	1	Fiscal number
52	RFF	M	1	Fiscal number

Standard				Implementierung		
Bez	Name	St	Format	St	Format	Anwendung / Bemerkung
C506	Reference	M		M		
1153	Reference code qualifier	M	an..3	M	an..3	**FC** Fiscal number
1154	Reference identifier	C	an..70	R	an..70	In Spain, the NIF (Número de Identificación Fiscal) must be provided as the fiscal number.
1156	Document line identifier	C	an..6	N		Nicht genutzt
1056	Version identifier	C	an..9	N		Nicht genutzt
1060	Revision identifier	C	an..6	N		Nicht genutzt

Beispiel:

```
RFF+FC:ABC123'
```

Bez =Bezeichner; Nr = Laufende Segmentnummer im Guide; MaxWdh = Maximale Wiederholung; St = Status (M=Muss/Mandatory, C=Conditional, R=Erforderlich/Required, O=Optional, D=Abhängig von/Dependent, A=Empfohlen/Advised)

COPYRIGHT VDA 2026

Segmente

Nr	Bez	St	MaxWdh	Name
	SG3	O	1	VAT registration number
53	RFF	M	1	VAT registration number

Standard				Implementierung		
Bez	Name	St	Format	St	Format	Anwendung / Bemerkung
C506	Reference	M		M		
1153	Reference code qualifier	M	an..3	M	an..3	**VA** VAT registration number
1154	Reference identifier	C	an..70	R	an..70	In Spain, the NIF (Número de Identificación Fiscal) must be provided as the fiscal number.
1156	Document line identifier	C	an..6	N		Nicht genutzt
1056	Version identifier	C	an..9	N		Nicht genutzt
1060	Revision identifier	C	an..6	N		Nicht genutzt

Beispiel:

```
RFF+VA:ABC123'
```

Bez =Bezeichner; Nr = Laufende Segmentnummer im Guide; MaxWdh = Maximale Wiederholung; St = Status (M=Muss/Mandatory, C=Conditional, R=Erforderlich/Required, O=Optional, D=Abhängig von/Dependent, A=Empfohlen/Advised)

COPYRIGHT VDA 2026

Segmente

Nr	Bez	St	MaxWdh	Name
	SG4	O	1	Information contact
54	CTA	M	1	Information contact

Standard				Implementierung			
Bez	Name	St	Format	St	Format	Anwendung / Bemerkung	
3139	Contact function code	C	an..3	R	an..3	**IC** Information contact	
C056	Contact details	C		O			
3413	Contact identifier	C	an..17	O	an..17	Identifies the department or employee by a unique identifier other than their name when given as a contact.	
3412	Contact name	C	an..256	O	an..35	Name of the contact person or department	

Information that identifies the contact person or department on general matters, together with information about how they can be contacted.
Beispiel:

CTA+IC+:X'

Bez =Bezeichner; Nr = Laufende Segmentnummer im Guide; MaxWdh = Maximale Wiederholung; St = Status (M=Muss/Mandatory, C=Conditional, R=Erforderlich/Required, O=Optional, D=Abhängig von/Dependent, A=Empfohlen/Advised)

COPYRIGHT VDA 2026

Segmente

Nr	Bez	St	MaxWdh	Name
	SG4	O	1	Information contact
55	COM	O	5	Communication contact

Standard				Implementierung		
Bez	Name	St	Format	St	Format	Anwendung / Bemerkung
C076	Communication contact	M		M		
3148	Communication address identifier	M	an..512	M	an..100	The number or virtual 'address' of a telephone in a telecommunication system The number or virtual 'address' of a telephone in an organisation's internal telecommunication system The number or virtual 'address' of a facsimile in a telecommunication system The number or virtual 'address' of an e-mail mailbox in the internet or other network. Within a given facility a detailed department mail delivery location.
3155	Communication means type code	M	an..3	M	an..3	**EM** Electronic mail **FX** Telefax **TE** Telephone

Beispiel:

```
COM+X:EM'
```

Bez =Bezeichner; Nr = Laufende Segmentnummer im Guide; MaxWdh = Maximale Wiederholung; St = Status (M=Muss/Mandatory, C=Conditional, R=Erforderlich/Required, O=Optional, D=Abhängig von/Dependent, A=Empfohlen/Advised)

COPYRIGHT VDA 2026

Segmente

Nr	Bez	St	MaxWdh	Name
	SG2	O	1	Carrier
56	NAD	M	1	The carrier is the business partner put in charge of the transportation of the goods by the freight forwarder

Standard				Implementierung		
Bez	Name	St	Format	St	Format	Anwendung / Bemerkung
3035	Party function code qualifier	M	an..3	M	an..3	**CA** Carrier
C082	Party identification details	C		O		
3039	Party identifier	M	an..35	M	an..35	Unique identifier of business partner (customer number, supplier number, DUNS number, etc.).
1131	Code list identification code	C	an..17	N		Nicht genutzt
3055	Code list responsible agency code	C	an..3	R	an..3	Code specifying the agency responsible for a code list. **10** ODETTE **16** US, D&B (Dun & Bradstreet Corporation) **5** ISO (International Organization for Standardization) 3055 **86** Assigned by party originating the message 3055 **182** US, Standard Carrier Alpha Code (Motor) 3055
C058	Name and address	C		N		Nicht genutzt
3124	Name and address description	M	an..35	N		Nicht genutzt
3124	Name and address description	C	an..35	N		Nicht genutzt
3124	Name and address description	C	an..35	N		Nicht genutzt
3124	Name and address description	C	an..35	N		Nicht genutzt
3124	Name and address description	C	an..35	N		Nicht genutzt
C080	Party name	C		O		
3036	Party name	M	an..70	M	an..35	Single text line for specification of a name
3036	Party name	C	an..70	O	an..35	see 3124 # 1
3036	Party name	C	an..70	N		Nicht genutzt
3036	Party name	C	an..70	N		Nicht genutzt
3036	Party name	C	an..70	N		Nicht genutzt
3045	Party name format code	C	an..3	N		Nicht genutzt
C059	Street	C		O		
3042	Street and number or post office box identifier	M	an..256	M	an..35	Part of address identifying the location of a building, normally given together with street
3042	Street and number or post office box identifier	C	an..256	O	an..35	see 3042 # 1
3042	Street and number or post office box identifier	C	an..256	N		Nicht genutzt
3042	Street and number or post office box identifier	C	an..256	N		Nicht genutzt
3164	City name	C	an..35	O	an..35	The name of the city, town, or village of this address.
C819	Country subdivision details	C		O		
3229	Country subdivision identifier	C	an..9	R	an..9	State or region within a country. The use of UN LoCodes is recommended.
1131	Code list identification code	C	an..17	N		Nicht genutzt

Bez =Bezeichner; Nr = Laufende Segmentnummer im Guide; MaxWdh = Maximale Wiederholung; St = Status (M=Muss/Mandatory, C=Conditional, R=Erforderlich/Required, O=Optional, D=Abhängig von/Dependent, A=Empfohlen/Advised)

COPYRIGHT VDA 2026

Segmente

Standard				Implementierung		
Bez	Name	St	Format	St	Format	Anwendung / Bemerkung
3055	Code list responsible agency code	C	an..3	N		Nicht genutzt
3228	Country subdivision name	C	an..70	N		Nicht genutzt
3251	Postal identification code	C	an..17	O	an..17	Identifier of one or more address data properties according to the postal service of the respective country
3207	Country identifier	C	an..3	O	an..3	Provides the country part of an address using a code. Use ISO3166 two alpha code.

Beispiel:

```
NAD+CA+Identifier::5++Name1:Name2+Street1:Street2+City++12345+DE'
```

Bez =Bezeichner; Nr = Laufende Segmentnummer im Guide; MaxWdh = Maximale Wiederholung; St = Status (M=Muss/Mandatory, C=Conditional, R=Erforderlich/Required, O=Optional, D=Abhängig von/Dependent, A=Empfohlen/Advised)

COPYRIGHT VDA 2026

Segmente

Nr	Bez	St	MaxWdh	Name
	SG3	O	1	Additional Party ID (DUNS)
57	RFF	M	1	Reference

Standard				Implementierung		
Bez	Name	St	Format	St	Format	Anwendung / Bemerkung
C506	Reference	M		M		
1153	Reference code qualifier	M	an..3	M	an..3	**ANK** Reference number assigned by third party
1154	Reference identifier	C	an..70	R	n9	DUNS number
1156	Document line identifier	C	an..6	N		Nicht genutzt
1056	Version identifier	C	an..9	N		Nicht genutzt
1060	Revision identifier	C	an..6	N		Nicht genutzt

This segment can be used to transmit the DUNS number of the business partner, in addition to the customer number or the supplier number.
Beispiel:

RFF+ANK:555555555'

Bez =Bezeichner; Nr = Laufende Segmentnummer im Guide; MaxWdh = Maximale Wiederholung; St = Status (M=Muss/Mandatory, C=Conditional, R=Erforderlich/Required, O=Optional, D=Abhängig von/Dependent, A=Empfohlen/Advised)

COPYRIGHT VDA 2026

Segmente

Nr	Bez	St	MaxWdh	Name
	SG3	O	1	Fiscal number
58	RFF	M	1	Fiscal number

Standard				Implementierung		
Bez	Name	St	Format	St	Format	Anwendung / Bemerkung
C506	Reference	M		M		
1153	Reference code qualifier	M	an..3	M	an..3	**FC** Fiscal number
1154	Reference identifier	C	an..70	R	an..70	In Spain, the NIF (Número de Identificación Fiscal) must be provided as the fiscal number.
1156	Document line identifier	C	an..6	N		Nicht genutzt
1056	Version identifier	C	an..9	N		Nicht genutzt
1060	Revision identifier	C	an..6	N		Nicht genutzt

Beispiel:

```
RFF+FC:ABC123'
```

Bez =Bezeichner; Nr = Laufende Segmentnummer im Guide; MaxWdh = Maximale Wiederholung; St = Status (M=Muss/Mandatory, C=Conditional, R=Erforderlich/Required, O=Optional, D=Abhängig von/Dependent, A=Empfohlen/Advised)

COPYRIGHT VDA 2026

Segmente

Nr	Bez	St	MaxWdh	Name
	SG3	O	1	VAT registration number
59	RFF	M	1	VAT registration number

Standard				Implementierung		
Bez	Name	St	Format	St	Format	Anwendung / Bemerkung
C506	Reference	M		M		
1153	Reference code qualifier	M	an..3	M	an..3	**VA** VAT registration number
1154	Reference identifier	C	an..70	R	an..70	In Spain, the NIF (Número de Identificación Fiscal) must be provided as the fiscal number.
1156	Document line identifier	C	an..6	N		Nicht genutzt
1056	Version identifier	C	an..9	N		Nicht genutzt
1060	Revision identifier	C	an..6	N		Nicht genutzt

Beispiel:

```
RFF+VA:ABC123'
```

Bez =Bezeichner; Nr = Laufende Segmentnummer im Guide; MaxWdh = Maximale Wiederholung; St = Status (M=Muss/Mandatory, C=Conditional, R=Erforderlich/Required, O=Optional, D=Abhängig von/Dependent, A=Empfohlen/Advised)

COPYRIGHT VDA 2026

Segmente

Nr	Bez	St	MaxWdh	Name
	SG4	O	1	Driver's mobile number and perferred Language
60	CTA	M	1	Contact information

Standard				Implementierung			
Bez	Name	St	Format	St	Format	Anwendung / Bemerkung	
3139	Contact function code	C	an..3	R	an..3	**IC** Information contact	
C056	Contact details	C		R			
3413	Contact identifier	C	an..17	R	an..17	Preferred language for communication - use ISO 639-1	
3412	Contact name	C	an..256	O	an..256	Driver's name	

Beispiel:

```
CTA+IC+en:John Doe'
```

Bez =Bezeichner; Nr = Laufende Segmentnummer im Guide; MaxWdh = Maximale Wiederholung; St = Status (M=Muss/Mandatory, C=Conditional, R=Erforderlich/Required, O=Optional, D=Abhängig von/Dependent, A=Empfohlen/Advised)

COPYRIGHT VDA 2026

Segmente

Nr	Bez	St	MaxWdh	Name
	SG4	O	1	Driver's mobile number and perferred Language
61	COM	C	5	Communication contact

Standard				Implementierung			
Bez	Name	St	Format	St	Format	Anwendung / Bemerkung	
C076	Communication contact	M		M			
3148	Communication address identifier	M	an..512	M	an..512	Mobile phone number	
3155	Communication means type code	M	an..3	M	an..3	**TE** Telephone	

Beispiel:

COM+X:TE'

Bez =Bezeichner; Nr = Laufende Segmentnummer im Guide; MaxWdh = Maximale Wiederholung; St = Status (M=Muss/Mandatory, C=Conditional, R=Erforderlich/Required, O=Optional, D=Abhängig von/Dependent, A=Empfohlen/Advised)

COPYRIGHT VDA 2026

Segmente

Nr	Bez	St	MaxWdh	Name
	SG2	O	1	A party in charge of groupage.
62	NAD	M	1	A party in charge of groupage.

Standard				Implementierung		
Bez	Name	St	Format	St	Format	Anwendung / Bemerkung
3035	Party function code qualifier	M	an..3	M	an..3	**FZ** Grouping centre
C082	Party identification details	C		R		
3039	Party identifier	M	an..35	M	an..35	
1131	Code list identification code	C	an..17	N		Nicht genutzt
3055	Code list responsible agency code	C	an..3	R	an..3	Code specifying the agency responsible for a code list. **10** ODETTE **16** US, D&B (Dun & Bradstreet Corporation) **91** Assigned by seller or seller's agent **92** Assigned by buyer or buyer's agent
C058	Name and address	C		N		Nicht genutzt
3124	Name and address description	M	an..35	N		Nicht genutzt
3124	Name and address description	C	an..35	N		Nicht genutzt
3124	Name and address description	C	an..35	N		Nicht genutzt
3124	Name and address description	C	an..35	N		Nicht genutzt
3124	Name and address description	C	an..35	N		Nicht genutzt
C080	Party name	C		N		Nicht genutzt
3036	Party name	M	an..70	N		Nicht genutzt
3036	Party name	C	an..70	N		Nicht genutzt
3036	Party name	C	an..70	N		Nicht genutzt
3036	Party name	C	an..70	N		Nicht genutzt
3036	Party name	C	an..70	N		Nicht genutzt
3045	Party name format code	C	an..3	N		Nicht genutzt
C059	Street	C		N		Nicht genutzt
3042	Street and number or post office box identifier	M	an..256	N		Nicht genutzt
3042	Street and number or post office box identifier	C	an..256	N		Nicht genutzt
3042	Street and number or post office box identifier	C	an..256	N		Nicht genutzt
3042	Street and number or post office box identifier	C	an..256	N		Nicht genutzt
3164	City name	C	an..35	N		Nicht genutzt
C819	Country subdivision details	C		N		Nicht genutzt
3229	Country subdivision identifier	C	an..9	N		Nicht genutzt
1131	Code list identification code	C	an..17	N		Nicht genutzt
3055	Code list responsible agency code	C	an..3	N		Nicht genutzt
3228	Country subdivision name	C	an..70	N		Nicht genutzt
3251	Postal identification code	C	an..17	N		Nicht genutzt
3207	Country identifier	C	an..3	N		Nicht genutzt

Bez =Bezeichner; Nr = Laufende Segmentnummer im Guide; MaxWdh = Maximale Wiederholung; St = Status (M=Muss/Mandatory, C=Conditional, R=Erforderlich/Required, O=Optional, D=Abhängig von/Dependent, A=Empfohlen/Advised)

COPYRIGHT VDA 2026

Segmente

Beispiel:

```
NAD+FZ+GroupingCenterID::92'
```

Bez =Bezeichner; Nr = Laufende Segmentnummer im Guide; MaxWdh = Maximale Wiederholung; St = Status (M=Muss/Mandatory, C=Conditional, R=Erforderlich/Required, O=Optional, D=Abhängig von/Dependent, A=Empfohlen/Advised)

COPYRIGHT VDA 2026

Segmente

Nr	Bez	St	MaxWdh	Name
	SG2	O	1	A party in charge of groupage.
63	LOC	O	1	Place of transshipment

Standard				Implementierung		
Bez	Name	St	Format	St	Format	Anwendung / Bemerkung
3227	Location function code qualifier	M	an..3	M	an..3	**13** Place of transhipment
C517	Location identification	C		R		
3225	Location identifier	C	an..35	O	an..35	Identifier of location, site, etc.
1131	Code list identification code	C	an..17	N		Nicht genutzt
3055	Code list responsible agency code	C	an..3	O	an..3	**92** Assigned by buyer or buyer's agent
3224	Location name	C	an..256	O	an..256	Name of place/location; if necessary, use complete address.
C519	Related location one identification	C		N		Nicht genutzt
3223	First related location identifier	C	an..35	N		Nicht genutzt
1131	Code list identification code	C	an..17	N		Nicht genutzt
3055	Code list responsible agency code	C	an..3	N		Nicht genutzt
3222	First related location name	C	an..70	N		Nicht genutzt
C553	Related location two identification	C		O		
3233	Second related location identifier	C	an..35	O	an..35	Additional location ID
1131	Code list identification code	C	an..17	N		Nicht genutzt
3055	Code list responsible agency code	C	an..3	D	an..3	Code specifying the agency responsible for a code list. Has to be provided if 3233 is used. **10** ODETTE **16** US, D&B (Dun & Bradstreet Corporation) **91** Assigned by seller or seller's agent **92** Assigned by buyer or buyer's agent
3232	Second related location name	C	an..70	O	an..70	Additional location text
5479	Relation code	C	an..3	N		Nicht genutzt

Beispiel:

```
LOC+13+Umschlagspunkt Id::92:Umschlagspunkt++:::X'
```

Bez =Bezeichner; Nr = Laufende Segmentnummer im Guide; MaxWdh = Maximale Wiederholung; St = Status (M=Muss/Mandatory, C=Conditional, R=Erforderlich/Required, O=Optional, D=Abhängig von/Dependent, A=Empfohlen/Advised)

COPYRIGHT VDA 2026

Segmente

Nr	Bez	St	MaxWdh	Name
	SG3	O	1	Additional Party ID (DUNS)
64	RFF	M	1	Reference

Standard				Implementierung		
Bez	Name	St	Format	St	Format	Anwendung / Bemerkung
C506	Reference	M		M		
1153	Reference code qualifier	M	an..3	M	an..3	**ANK** Reference number assigned by third party
1154	Reference identifier	C	an..70	R	an..17	DUNS number
1156	Document line identifier	C	an..6	N		Nicht genutzt
1056	Version identifier	C	an..9	N		Nicht genutzt
1060	Revision identifier	C	an..6	N		Nicht genutzt

This segment can be used to transmit the DUNS number of the business partner, in addition to the customer number or the supplier number.
Beispiel:

RFF+ANK:X'

Bez =Bezeichner; Nr = Laufende Segmentnummer im Guide; MaxWdh = Maximale Wiederholung; St = Status (M=Muss/Mandatory, C=Conditional, R=Erforderlich/Required, O=Optional, D=Abhängig von/Dependent, A=Empfohlen/Advised)

COPYRIGHT VDA 2026

Segmente

Nr	Bez	St	MaxWdh	Name
	SG3	O	1	Fiscal number
65	RFF	M	1	Fiscal number

Standard				Implementierung		
Bez	Name	St	Format	St	Format	Anwendung / Bemerkung
C506	Reference	M		M		
1153	Reference code qualifier	M	an..3	M	an..3	**FC** Fiscal number
1154	Reference identifier	C	an..70	R	an..70	In Spain, the NIF (Número de Identificación Fiscal) must be provided as the fiscal number.
1156	Document line identifier	C	an..6	N		Nicht genutzt
1056	Version identifier	C	an..9	N		Nicht genutzt
1060	Revision identifier	C	an..6	N		Nicht genutzt

Beispiel:

```
RFF+FC:ABC123'
```

Bez =Bezeichner; Nr = Laufende Segmentnummer im Guide; MaxWdh = Maximale Wiederholung; St = Status (M=Muss/Mandatory, C=Conditional, R=Erforderlich/Required, O=Optional, D=Abhängig von/Dependent, A=Empfohlen/Advised)

COPYRIGHT VDA 2026

Segmente

Nr	Bez	St	MaxWdh	Name
	SG3	O	1	VAT registration number
66	RFF	M	1	VAT registration number

Standard				Implementierung		
Bez	Name	St	Format	St	Format	Anwendung / Bemerkung
C506	Reference	M		M		
1153	Reference code qualifier	M	an..3	M	an..3	**VA** VAT registration number
1154	Reference identifier	C	an..70	R	an..70	In Spain, the NIF (Número de Identificación Fiscal) must be provided as the fiscal number.
1156	Document line identifier	C	an..6	N		Nicht genutzt
1056	Version identifier	C	an..9	N		Nicht genutzt
1060	Revision identifier	C	an..6	N		Nicht genutzt

Beispiel:

RFF+VA:ABC123'

Bez =Bezeichner; Nr = Laufende Segmentnummer im Guide; MaxWdh = Maximale Wiederholung; St = Status (M=Muss/Mandatory, C=Conditional, R=Erforderlich/Required, O=Optional, D=Abhängig von/Dependent, A=Empfohlen/Advised)

COPYRIGHT VDA 2026

Segmente

Nr	Bez	St	MaxWdh	Name
	SG5	O	1	Carrier arrives with empty packages indicator
67	TOD	M	1	Trigger segment

Standard				Implementierung		
Bez	Name	St	Format	St	Format	Anwendung / Bemerkung
4055	Delivery or transport terms function code	C	an..3	R	an..3	**2** Despatch condition
4215	Transport charges payment method code	C	an..3	N		Nicht genutzt
C100	Terms of delivery or transport	C		N		Nicht genutzt
4053	Delivery or transport terms description code	C	an..3	N		Nicht genutzt
1131	Code list identification code	C	an..17	N		Nicht genutzt
3055	Code list responsible agency code	C	an..3	N		Nicht genutzt
4052	Delivery or transport terms description	C	an..70	N		Nicht genutzt
4052	Delivery or transport terms description	C	an..70	N		Nicht genutzt

Beispiel:

TOD+2'

Bez =Bezeichner; Nr = Laufende Segmentnummer im Guide; MaxWdh = Maximale Wiederholung; St = Status (M=Muss/Mandatory, C=Conditional, R=Erforderlich/Required, O=Optional, D=Abhängig von/Dependent, A=Empfohlen/Advised)

COPYRIGHT VDA 2026

Segmente

Nr	Bez	St	MaxWdh	Name
	SG5	O	1	Carrier arrives with empty packages indicator
68	FTX	R	1	Indicator

Standard				Implementierung		
Bez	Name	St	Format	St	Format	Anwendung / Bemerkung
4451	Text subject code qualifier	M	an..3	M	an..3	**TRA** Transportation information
4453	Free text function code	C	an..3	N		Nicht genutzt
C107	Text reference	C		R		
4441	Free text description code	M	an..17	M	an..17	**003** Carrier arrives with empty packages 4441(1)
1131	Code list identification code	C	an..17	N		Nicht genutzt
3055	Code list responsible agency code	C	an..3	N		Nicht genutzt
C108	Text literal	C		N		Nicht genutzt
4440	Free text	M	an..512	N		Nicht genutzt
4440	Free text	C	an..512	N		Nicht genutzt
4440	Free text	C	an..512	N		Nicht genutzt
4440	Free text	C	an..512	N		Nicht genutzt
4440	Free text	C	an..512	N		Nicht genutzt
3453	Language name code	C	an..3	N		Nicht genutzt
4447	Free text format code	C	an..3	N		Nicht genutzt

Beispiel:

```
FTX+TRA++003'
```

Bez =Bezeichner; Nr = Laufende Segmentnummer im Guide; MaxWdh = Maximale Wiederholung; St = Status (M=Muss/Mandatory, C=Conditional, R=Erforderlich/Required, O=Optional, D=Abhängig von/Dependent, A=Empfohlen/Advised)

COPYRIGHT VDA 2026

Segmente

Nr	Bez	St	MaxWdh	Name
	SG6	O	1	Means of transport
69	TDT	M	1	Transport information

Standard				Implementierung		
Bez	Name	St	Format	St	Format	Anwendung / Bemerkung
8051	Transport stage code qualifier	M	an..3	M	an..3	Identification of the point or port of departure, shipment or destination as required under the applicable incoterms. **12** At departure **X01** Current transport leg ODDC156(1)
8028	Means of transport journey identifier	C	an..17	O	an..17	Unique reference given by the carrier to a certain journey or departure of a means of transport.
C220	Mode of transport	C		O		
8067	Transport mode name code	C	an..3	R	an..3	Code specifying the name of a mode of transport. Use UN/ECE Recommendation No 19. **20** Rail transport **23** Trailers or road vehicles being transported by rail **30** Road transport **40** Air transport **50** Mail
8066	Transport mode name	C	an..17	N		Nicht genutzt
C001	Transport means	C		O		
8179	Transport means description code	C	an..8	O	an..8	**T01** Eurotrailer H 2.6, W 2.48, L 13.6 tarpauline or box ODDC087(1) **T02** Megatrailer H 3.0, W 2.48, L 13.6 tarpauline or box ODDC087(1) **T03** Jumbo swap body L 7.82, H 3.0, W 2.48 m ODDC087(1) **T04** Jumbo trailer pull ODDC087(1) **T05** 7.5 ton ODDC087(1) **T06** VAN / bus ODDC087(1) **T07** Car ODDC087(1) **T08** Aircraft ODDC087(1) **T09** Ocean Vessel ODDC087(1) **T10** Gigaliner ODDC087(1) **T11** Tautliner ODDC087(1) **T12** Railway wagon ODDC087(1) **T13** Gooseneck Chassis ODDC087(1)
1131	Code list identification code	C	an..17	N		Nicht genutzt
3055	Code list responsible agency code	C	an..3	N		Nicht genutzt
8178	Transport means description	C	an..17	N		Nicht genutzt
C040	Carrier	C		N		Nicht genutzt
3127	Carrier identifier	C	an..17	N		Nicht genutzt

Bez =Bezeichner; Nr = Laufende Segmentnummer im Guide; MaxWdh = Maximale Wiederholung; St = Status (M=Muss/Mandatory, C=Conditional, R=Erforderlich/Required, O=Optional, D=Abhängig von/Dependent, A=Empfohlen/Advised)

COPYRIGHT VDA 2026

Segmente

Standard				Implementierung		
Bez	Name	St	Format	St	Format	Anwendung / Bemerkung
1131	Code list identification code	C	an..17	N		Nicht genutzt
3055	Code list responsible agency code	C	an..3	N		Nicht genutzt
3126	Carrier name	C	an..35	N		Nicht genutzt
8101	Transit direction indicator code	C	an..3	N		Nicht genutzt
C401	Excess transportation information	C		O		
8457	Excess transportation reason code	M	an..3	M	an..3	ZZZ is only a placeholder, indicating that DE is assigned status "M". In the message, only the special route number (or similar reference) is transmitted in DE 7130. The responsibilities are to be defined outside of the EDI data exchange. **ZZZ** Mutually defined
8459	Excess transportation responsibility code	M	an..3	M	an..3	**X** Responsibility to be determined
7130	Customer shipment authorisation identifier	C	an..17	R	an..17	Authorisation number
C222	Transport identification	C		O		
8213	Transport means identification name identifier	C	an..35	O	an..35	Identifier of a means of transport, like license plate etc.
1131	Code list identification code	C	an..17	N		Nicht genutzt
3055	Code list responsible agency code	C	an..3	O	an..3	
8212	Transport means identification name	C	an..70	N		Nicht genutzt
8453	Transport means nationality code	C	an..3	O	a2	Provides the country using a code. Use ISO3166 two alpha code.
8281	Transport means ownership indicator code	C	an..3	N		Nicht genutzt
C003	Power type	C		O		
7041	Power type code	C	an..3	R	an..3	**1** Diesel **2** Diesel and electric **3** Electric **4** Liquid Propane Gas **5** Petrol **6** Petrol and electric **7** Hydrogen **8** Compressed Natural Gas **9** Liquified Natural Gas
1131	Code list identification code	C	an..17	N		Nicht genutzt
3055	Code list responsible agency code	C	an..3	N		Nicht genutzt
7040	Power type description	C	an..17	N		Nicht genutzt
C290	Transport service	C		O		
8462	Transport service identification code	C	an..17	R	an..17	Transport concept ID, type of contract
1131	Code list identification code	C	an..17	N		Nicht genutzt
3055	Code list responsible agency code	C	an..3	O	an..3	**87** Assigned by carrier **91** Assigned by seller or seller's agent **92** Assigned by buyer or buyer's agent
8463	Transport service name	C	an..35	N		Nicht genutzt
8464	Transport service description	C	an..256	N		Nicht genutzt

Beispiel:

Bez =Bezeichner; Nr = Laufende Segmentnummer im Guide; MaxWdh = Maximale Wiederholung; St = Status (M=Muss/Mandatory, C=Conditional, R=Erforderlich/Required, O=Optional, D=Abhängig von/Dependent, A=Empfohlen/Advised)

COPYRIGHT VDA 2026

Segmente

```
TDT+12++30+T01+++ZZZ:X:X+::::AD++1+X::92'
```

Bez =Bezeichner; Nr = Laufende Segmentnummer im Guide; MaxWdh = Maximale Wiederholung; St = Status (M=Muss/Mandatory, C=Conditional, R=Erforderlich/Required, O=Optional, D=Abhängig von/Dependent, A=Empfohlen/Advised)

COPYRIGHT VDA 2026

Generated by GEFEG.FX

Segmente

Nr	Bez	St	MaxWdh	Name
	SG6	O	1	Means of transport
70	TMD	O	1	Transport movement type and loading sequence

Standard				Implementierung		
Bez	Name	St	Format	St	Format	Anwendung / Bemerkung
C219	Movement type	C		O		
8335	Movement type description code	C	an..3	R	an..3	**X01** Full truck load - with separate tender ODDC166(1) **X02** Full truck load - within the scope of area contract freight forwarder ODDC166(1) **X03** Milk run during unloading - with separate tender, direct contract ODDC166(1) **X04** Milk run during unloading - within the scope of area contract freight forwarder ODDC166(1) **X05** Distribution by area contract freight forwarder ODDC166(1) **X06** Milk run during loading - with separate tender, direct contract ODDC166(1) **X07** Milk run during loading - within the scope of area contract freight forwarder ODDC166(1) **X08** Milk run during loading and unloading - with separate tender, direct contract ODDC166(1) **X09** Milk run during loading and unloading - within the scope of area contract freight forwarder ODDC166(1) **X10** Full Truck Load - with separate tender transport leg ship-from to consolidation centre / cross-dock ODDC166(1) **X11** Full Truck Load - with separate tender for transport leg cros-dock to cross-dock ODDC166(1) **X12** Full Truck Load - with separate tender for transport leg cross-dock to ship-to ODDC166(1) **X13** Full Container Load - with separate tender from ship-from to ship-to ODDC166(1) **X14** Less than Full Container Load - with separate tender for transport leg from ship-from to consolidation centre / cross-dock ODDC166(1) **X15** Less than Full Container Load - with separate tender for transport leg cross-dock to cross-dock ODDC166(1) **X16** Less than Full Container Load - with separate tender for transport leg cross-dock to ship-to ODDC166(1) **X17** Courier Express Parcel (CEP) ODDC166(1) **X18** Special transport with frame contract ODDC166(1) **X19** Special transport spot market ODDC166(1)
8334	Movement type description	C	an..35	N		Nicht genutzt

Bez =Bezeichner; Nr = Laufende Segmentnummer im Guide; MaxWdh = Maximale Wiederholung; St = Status (M=Muss/Mandatory, C=Conditional, R=Erforderlich/Required, O=Optional, D=Abhängig von/Dependent, A=Empfohlen/Advised)

COPYRIGHT VDA 2026

Segmente

Standard				Implementierung		
Bez	Name	St	Format	St	Format	Anwendung / Bemerkung
8332	Equipment plan description	C	an..26	R	an..26	Order of loading 1 to 99
8341	Haulage arrangements code	C	an..3	N		Nicht genutzt

Beispiel:

```
TMD++1'
```

Bez =Bezeichner; Nr = Laufende Segmentnummer im Guide; MaxWdh = Maximale Wiederholung; St = Status (M=Muss/Mandatory, C=Conditional, R=Erforderlich/Required, O=Optional, D=Abhängig von/Dependent, A=Empfohlen/Advised)

COPYRIGHT VDA 2026

Segmente

Nr	Bez	St	MaxWdh	Name
	SG8	O	1	Equipment
71	EQD	M	1	Equipment details

Standard				Implementierung		
Bez	Name	St	Format	St	Format	Anwendung / Bemerkung
8053	Equipment type code qualifier	M	an..3	M	an..3	Coded qualifier for type of an equipment. SW = swap body **CN** Container **RR** Rail car **SW** Swap body **TE** Trailer
C237	Equipment identification	C		O		
8260	Equipment identifier	C	an..17	O	an..17	Identifier of an equipment used.
1131	Code list identification code	C	an..17	N		Nicht genutzt
3055	Code list responsible agency code	C	an..3	N		Nicht genutzt
3207	Country identifier	C	an..3	N		Nicht genutzt
C224	Equipment size and type	C		O		
8155	Equipment size and type description code	C	an..10	N		Nicht genutzt
1131	Code list identification code	C	an..17	N		Nicht genutzt
3055	Code list responsible agency code	C	an..3	N		Nicht genutzt
8154	Equipment size and type description	C	an..35	R	an..35	In the case a consignment is distributed to two swap bodies, but these are considered to be inseparable, the identifier of the second swap body shall be specified in this data element. The same applies to gigaliners with two trailers.
8077	Equipment supplier code	C	an..3	N		Nicht genutzt
8249	Equipment status code	C	an..3	N		Nicht genutzt
8169	Full or empty indicator code	C	an..3	N		Nicht genutzt
4233	Marking instructions code	C	an..3	N		Nicht genutzt

Information identifying and describing the equipment used.
Beispiel:

EQD+CN+ContainerId+:::X'

Bez =Bezeichner; Nr = Laufende Segmentnummer im Guide; MaxWdh = Maximale Wiederholung; St = Status (M=Muss/Mandatory, C=Conditional, R=Erforderlich/Required, O=Optional, D=Abhängig von/Dependent, A=Empfohlen/Advised)

COPYRIGHT VDA 2026

Segmente

Nr	Bez	St	MaxWdh	Name
	SG8	O	1	Equipment
72	MEA	O	3	Length / width / height

Standard				Implementierung		
Bez	Name	St	Format	St	Format	Anwendung / Bemerkung
6311	Measurement purpose code qualifier	M	an..3	M	an..3	**PD** Physical dimensions (product ordered)
C502	Measurement details	C		R		
6313	Measured attribute code	C	an..3	R	an..3	**LN** Length **WD** Width dimension **HT** Height dimension
6321	Measurement significance code	C	an..3	N		Nicht genutzt
6155	Non-discrete measurement name code	C	an..17	N		Nicht genutzt
6154	Non-discrete measurement name	C	an..70	N		Nicht genutzt
C174	Value/range	C		R		
6411	Measurement unit code	C	an..8	R	an..8	**CMT** centimetre **DMT** decimetre **MMT** millimetre **MTR** metre
6314	Measure	C	an..18	R	an..18	
6162	Range minimum quantity	C	n..18	N		Nicht genutzt
6152	Range maximum quantity	C	n..18	N		Nicht genutzt
6432	Significant digits quantity	C	n..2	N		Nicht genutzt
7383	Surface or layer code	C	an..3	N		Nicht genutzt

Beispiel:

MEA+PD+LN+CMT:2000'

Bez =Bezeichner; Nr = Laufende Segmentnummer im Guide; MaxWdh = Maximale Wiederholung; St = Status (M=Muss/Mandatory, C=Conditional, R=Erforderlich/Required, O=Optional, D=Abhängig von/Dependent, A=Empfohlen/Advised)

COPYRIGHT VDA 2026

Segmente

Nr	Bez	St	MaxWdh	Name
	SG8	O	1	Equipment
73	MEA	O	1	Net volume

Standard				Implementierung		
Bez	Name	St	Format	St	Format	Anwendung / Bemerkung
6311	Measurement purpose code qualifier	M	an..3	M	an..3	**PD** Physical dimensions (product ordered)
C502	Measurement details	C		R		
6313	Measured attribute code	C	an..3	R	an..3	**AAX** Net volume
6321	Measurement significance code	C	an..3	N		Nicht genutzt
6155	Non-discrete measurement name code	C	an..17	N		Nicht genutzt
6154	Non-discrete measurement name	C	an..70	N		Nicht genutzt
C174	Value/range	C		R		
6411	Measurement unit code	C	an..8	R	an..8	**DMQ** cubic decimetre **LTR** litre **MTQ** cubic metre
6314	Measure	C	an..18	R	an..18	
6162	Range minimum quantity	C	n..18	N		Nicht genutzt
6152	Range maximum quantity	C	n..18	N		Nicht genutzt
6432	Significant digits quantity	C	n..2	N		Nicht genutzt
7383	Surface or layer code	C	an..3	N		Nicht genutzt

Beispiel:

```
MEA+PD+AAX+DMQ:2000'
```

Bez =Bezeichner; Nr = Laufende Segmentnummer im Guide; MaxWdh = Maximale Wiederholung; St = Status (M=Muss/Mandatory, C=Conditional, R=Erforderlich/Required, O=Optional, D=Abhängig von/Dependent, A=Empfohlen/Advised)

COPYRIGHT VDA 2026

Segmente

Nr	Bez	St	MaxWdh	Name
	SG8	O	1	Equipment
74	SEL	O	25	Seal number

Standard				Implementierung		
Bez	Name	St	Format	St	Format	Anwendung / Bemerkung
9308	Transport unit seal identifier	C	an..35	R	an..35	Seal number
C215	Seal issuer	C		N		Nicht genutzt
9303	Sealing party name code	C	an..3	N		Nicht genutzt
1131	Code list identification code	C	an..17	N		Nicht genutzt
3055	Code list responsible agency code	C	an..3	N		Nicht genutzt
9302	Sealing party name	C	an..35	N		Nicht genutzt
4517	Seal condition code	C	an..3	N		Nicht genutzt
C208	Identity number range	C		N		Nicht genutzt
7402	Object identifier	M	an..35	N		Nicht genutzt
7402	Object identifier	C	an..35	N		Nicht genutzt
4525	Seal type code	C	an..3	N		Nicht genutzt

Beispiel:

```
SEL+1234567'
```

Bez =Bezeichner; Nr = Laufende Segmentnummer im Guide; MaxWdh = Maximale Wiederholung; St = Status (M=Muss/Mandatory, C=Conditional, R=Erforderlich/Required, O=Optional, D=Abhängig von/Dependent, A=Empfohlen/Advised)

COPYRIGHT VDA 2026

Segmente

Nr	Bez	St	MaxWdh	Name
	SG11	O	9999	Despatch control line / List of handling unit groups
				The maximum number of SG-CPS in a message shall not exceed 9999.
75	CPS	M	1	Despatch control line / List of handling unit groups

Standard				Implementierung		
Bez	Name	St	Format	St	Format	Anwendung / Bemerkung
7164	Hierarchical structure level identifier	M	an..35	R	n..6	Line Item Number line number Incremented counter generated by message sender, assigned to a packaging group in the message. We recommend starting at 1.
7166	Hierarchical structure parent identifier	C	an..35	N		Nicht genutzt
7075	Packaging level code	C	an..3	R	an..3	Code specifying a level of packaging. **5** Shipment level

If the freight forwarder has to make a shipment split (BGM 1225 = O9), he can list here which handling units are assigned to a shipment.
In contrast to the transport order, no distinction is made between external and simplified hanling units. All handling units which were indicated in the transport order with CPS+++3 or CPS+++4 are mapped here with CPS+++5.
It is not possible to specify packing levels below the outer ones.

Is a shipment split is necessary and the individual shipments have to be configured according to forwarder's instructions, this has to be handled in an exception process outside of EDI.
Beispiel:

```
CPS+9++5'
```

Bez =Bezeichner; Nr = Laufende Segmentnummer im Guide; MaxWdh = Maximale Wiederholung; St = Status (M=Muss/Mandatory, C=Conditional, R=Erforderlich/Required, O=Optional, D=Abhängig von/Dependent, A=Empfohlen/Advised)

COPYRIGHT VDA 2026

Segmente

Nr	Bez	St	MaxWdh	Name
	SG12	R	1	Handling unit group details
76	PAC	M	1	Package

Standard					Implementierung		
Bez	Name	St	Format		St	Format	Anwendung / Bemerkung
7224	Package quantity	C	n..8		R	n..6	Number Of Identical Handling Units Actual number of packages or handling units, e.g. belonging to a group of packages. Considered to be a number of identical packages.
C531	Packaging details	C			R		
7075	Packaging level code	C	an..3		N		Nicht genutzt
7233	Packaging related description code	C	an..3		R	an..3	**35** Type of package
7073	Packaging terms and conditions code	C	an..3		N		Nicht genutzt
C202	Package type	C			R		
7065	Package type description code	C	an..17		R	an..17	Code of packaging designation (packaging code of customer).
1131	Code list identification code	C	an..17		N		Nicht genutzt
3055	Code list responsible agency code	C	an..3		O	an..3	Code List Responsible Agency Code specifying the agency responsible for a code list. **92** Assigned by buyer or buyer's agent
7064	Type of packages	C	an..35		N		Nicht genutzt
C402	Package type identification	C			O		
7077	Description format code	M	an..3		M	an..3	**X** Semi-structured (code + text)
7064	Type of packages	M	an..35		M	an..35	Designation of packaging (packaging code of supplier). According to EDIFACT, this element is mandatory. If this DE group is to be used and the supplier has not defined internal packaging codes, enter the same value as in DE 7064 for VDA code.
7143	Item type identification code	C	an..3		O	an..3	**SA** Supplier's article number
7064	Type of packages	C	an..35		O	an..35	Designation of packaging, VDA code list (see separate documentation)
7143	Item type identification code	C	an..3		N		Nicht genutzt
C532	Returnable package details	C			N		Nicht genutzt
8395	Returnable package freight payment responsibility code	C	an..3		N		Nicht genutzt
8393	Returnable package load contents code	C	an..3		N		Nicht genutzt

Beispiel:

```
PAC+1+:35+4A::92+X:080607::080607'
```

Bez =Bezeichner; Nr = Laufende Segmentnummer im Guide; MaxWdh = Maximale Wiederholung; St = Status (M=Muss/Mandatory, C=Conditional, R=Erforderlich/Required, O=Optional, D=Abhängig von/Dependent, A=Empfohlen/Advised)

COPYRIGHT VDA 2026

Segmente

Nr	Bez	St	MaxWdh	Name
	SG12	R	1	Handling unit group details
77	MEA	O	1	Length

Standard				Implementierung		
Bez	Name	St	Format	St	Format	Anwendung / Bemerkung
6311	Measurement purpose code qualifier	M	an..3	M	an..3	**AAZ** Handling unit measurement
C502	Measurement details	C		R		
6313	Measured attribute code	C	an..3	R	an..3	**LN** Length
6321	Measurement significance code	C	an..3	N		Nicht genutzt
6155	Non-discrete measurement name code	C	an..17	N		Nicht genutzt
6154	Non-discrete measurement name	C	an..70	N		Nicht genutzt
C174	Value/range	C		R		
6411	Measurement unit code	C	an..8	R	an..8	**MMT** millimetre
6314	Measure	C	an..18	R	n..5	Length
6162	Range minimum quantity	C	n..18	N		Nicht genutzt
6152	Range maximum quantity	C	n..18	N		Nicht genutzt
6432	Significant digits quantity	C	n..2	N		Nicht genutzt
7383	Surface or layer code	C	an..3	N		Nicht genutzt

Length dimension of the package
Beispiel:

```
MEA+AAZ+LN+MMT:9'
```

Bez =Bezeichner; Nr = Laufende Segmentnummer im Guide; MaxWdh = Maximale Wiederholung; St = Status (M=Muss/Mandatory, C=Conditional, R=Erforderlich/Required, O=Optional, D=Abhängig von/Dependent, A=Empfohlen/Advised)

COPYRIGHT VDA 2026

Segmente

Nr	Bez	St	MaxWdh	Name
	SG12	R	1	Handling unit group details
78	MEA	O	1	Width

Standard				Implementierung		
Bez	Name	St	Format	St	Format	Anwendung / Bemerkung
6311	Measurement purpose code qualifier	M	an..3	M	an..3	**AAZ** Handling unit measurement
C502	Measurement details	C		R		
6313	Measured attribute code	C	an..3	R	an..3	Constant Identifying A Width Dimension **WD** Width dimension
6321	Measurement significance code	C	an..3	N		Nicht genutzt
6155	Non-discrete measurement name code	C	an..17	N		Nicht genutzt
6154	Non-discrete measurement name	C	an..70	N		Nicht genutzt
C174	Value/range	C		R		
6411	Measurement unit code	C	an..8	R	an..8	**MMT** millimetre
6314	Measure	C	an..18	R	n..12	Width
6162	Range minimum quantity	C	n..18	N		Nicht genutzt
6152	Range maximum quantity	C	n..18	N		Nicht genutzt
6432	Significant digits quantity	C	n..2	N		Nicht genutzt
7383	Surface or layer code	C	an..3	N		Nicht genutzt

Width dimension of the package
Beispiel:

```
MEA+AAZ+WD+MMT:9'
```

Bez =Bezeichner; Nr = Laufende Segmentnummer im Guide; MaxWdh = Maximale Wiederholung; St = Status (M=Muss/Mandatory, C=Conditional, R=Erforderlich/Required, O=Optional, D=Abhängig von/Dependent, A=Empfohlen/Advised)

COPYRIGHT VDA 2026

Segmente

Nr	Bez	St	MaxWdh	Name
	SG12	R	1	Handling unit group details
79	MEA	O	1	Height

Standard				Implementierung		
Bez	Name	St	Format	St	Format	Anwendung / Bemerkung
6311	Measurement purpose code qualifier	M	an..3	M	an..3	**AAZ** Handling unit measurement
C502	Measurement details	C		R		
6313	Measured attribute code	C	an..3	R	an..3	**HT** Height dimension
6321	Measurement significance code	C	an..3	N		Nicht genutzt
6155	Non-discrete measurement name code	C	an..17	N		Nicht genutzt
6154	Non-discrete measurement name	C	an..70	N		Nicht genutzt
C174	Value/range	C		R		
6411	Measurement unit code	C	an..8	R	an..3	**MMT** millimetre
6314	Measure	C	an..18	R	n..5	
6162	Range minimum quantity	C	n..18	N		Nicht genutzt
6152	Range maximum quantity	C	n..18	N		Nicht genutzt
6432	Significant digits quantity	C	n..2	N		Nicht genutzt
7383	Surface or layer code	C	an..3	N		Nicht genutzt

Height dimension of the package
Beispiel:

```
MEA+AAZ+HT+MMT:9'
```

Bez =Bezeichner; Nr = Laufende Segmentnummer im Guide; MaxWdh = Maximale Wiederholung; St = Status (M=Muss/Mandatory, C=Conditional, R=Erforderlich/Required, O=Optional, D=Abhängig von/Dependent, A=Empfohlen/Advised)

COPYRIGHT VDA 2026

Segmente

Nr	Bez	St	MaxWdh	Name
	SG12	R	1	Handling unit group details
80	MEA	O	1	Volume

Standard				Implementierung		
Bez	Name	St	Format	St	Format	Anwendung / Bemerkung
6311	Measurement purpose code qualifier	M	an..3	M	an..3	**AAZ** Handling unit measurement
C502	Measurement details	C		R		
6313	Measured attribute code	C	an..3	R	an..3	**ABJ** Volume
6321	Measurement significance code	C	an..3	N		Nicht genutzt
6155	Non-discrete measurement name code	C	an..17	N		Nicht genutzt
6154	Non-discrete measurement name	C	an..70	N		Nicht genutzt
C174	Value/range	C		R		
6411	Measurement unit code	C	an..8	R	an..8	**DMQ** cubic decimetre **MTQ** cubic metre
6314	Measure	C	an..18	R	n..5	Volume measure
6162	Range minimum quantity	C	n..18	N		Nicht genutzt
6152	Range maximum quantity	C	n..18	N		Nicht genutzt
6432	Significant digits quantity	C	n..2	N		Nicht genutzt
7383	Surface or layer code	C	an..3	N		Nicht genutzt

Total cube of the package
Beispiel:

MEA+AAZ+ABJ+MTQ:9'

Bez =Bezeichner; Nr = Laufende Segmentnummer im Guide; MaxWdh = Maximale Wiederholung; St = Status (M=Muss/Mandatory, C=Conditional, R=Erforderlich/Required, O=Optional, D=Abhängig von/Dependent, A=Empfohlen/Advised)

COPYRIGHT VDA 2026

Segmente

Nr	Bez	St	MaxWdh	Name
	SG12	R	1	Handling unit group details
81	MEA	O	1	Maximum stacking weight

Standard				Implementierung		
Bez	Name	St	Format	St	Format	Anwendung / Bemerkung
6311	Measurement purpose code qualifier	M	an..3	M	an..3	**ABR** Certified weight
C502	Measurement details	C		R		
6313	Measured attribute code	C	an..3	R	an..3	**AFE** Maximum stacking weight
6321	Measurement significance code	C	an..3	N		Nicht genutzt
6155	Non-discrete measurement name code	C	an..17	N		Nicht genutzt
6154	Non-discrete measurement name	C	an..70	N		Nicht genutzt
C174	Value/range	C		R		
6411	Measurement unit code	C	an..8	R	an..8	**KGM** kilogram
6314	Measure	C	an..18	R	n..12	Load bearing capacity
6162	Range minimum quantity	C	n..18	N		Nicht genutzt
6152	Range maximum quantity	C	n..18	N		Nicht genutzt
6432	Significant digits quantity	C	n..2	N		Nicht genutzt
7383	Surface or layer code	C	an..3	N		Nicht genutzt

Maximum load to be filled in a package or loaded onto an equipment.
Beispiel:

```
MEA+ABR+AFE+KGM:9'
```

Bez =Bezeichner; Nr = Laufende Segmentnummer im Guide; MaxWdh = Maximale Wiederholung; St = Status (M=Muss/Mandatory, C=Conditional, R=Erforderlich/Required, O=Optional, D=Abhängig von/Dependent, A=Empfohlen/Advised)

COPYRIGHT VDA 2026

Segmente

Nr	Bez	St	MaxWdh	Name
	SG12	R	1	Handling unit group details
82	MEA	O	1	Maximum stackability for transport purposes

Standard				Implementierung		
Bez	Name	St	Format	St	Format	Anwendung / Bemerkung
6311	Measurement purpose code qualifier	M	an..3	M	an..3	**ABU** Quota
C502	Measurement details	C		N		Nicht genutzt
6313	Measured attribute code	C	an..3	N		Nicht genutzt
6321	Measurement significance code	C	an..3	N		Nicht genutzt
6155	Non-discrete measurement name code	C	an..17	N		Nicht genutzt
6154	Non-discrete measurement name	C	an..70	N		Nicht genutzt
C174	Value/range	C		R		
6411	Measurement unit code	C	an..8	R	an..8	**C62** one
6314	Measure	C	an..18	R	n..9	Maximum stackability for transport purposes Number of layers of packages in the transport. 1 = not stackable 2 = 2 levels stackable 3 = 3 levels stackable
6162	Range minimum quantity	C	n..18	N		Nicht genutzt
6152	Range maximum quantity	C	n..18	N		Nicht genutzt
6432	Significant digits quantity	C	n..2	N		Nicht genutzt
7383	Surface or layer code	C	an..3	N		Nicht genutzt

Beispiel:

```
MEA+ABU++C62:9'
```

Bez =Bezeichner; Nr = Laufende Segmentnummer im Guide; MaxWdh = Maximale Wiederholung; St = Status (M=Muss/Mandatory, C=Conditional, R=Erforderlich/Required, O=Optional, D=Abhängig von/Dependent, A=Empfohlen/Advised)

COPYRIGHT VDA 2026

Segmente

Nr	Bez	St	MaxWdh	Name
	SG12	R	1	Handling unit group details
83	MEA	O	1	Gross weight

Standard				Implementierung		
Bez	Name	St	Format	St	Format	Anwendung / Bemerkung
6311	Measurement purpose code qualifier	M	an..3	M	an..3	**AAZ** Handling unit measurement
C502	Measurement details	C		R		
6313	Measured attribute code	C	an..3	R	an..3	**AAB** Goods item gross weight
6321	Measurement significance code	C	an..3	N		Nicht genutzt
6155	Non-discrete measurement name code	C	an..17	N		Nicht genutzt
6154	Non-discrete measurement name	C	an..70	N		Nicht genutzt
C174	Value/range	C		R		
6411	Measurement unit code	C	an..8	R	an..8	**KGM** kilogram
6314	Measure	C	an..18	R	n..12	Handling unit's gross weight
6162	Range minimum quantity	C	n..18	N		Nicht genutzt
6152	Range maximum quantity	C	n..18	N		Nicht genutzt
6432	Significant digits quantity	C	n..2	N		Nicht genutzt
7383	Surface or layer code	C	an..3	N		Nicht genutzt

Beispiel:

```
MEA+AAZ+AAB+KGM:9'
```

Bez =Bezeichner; Nr = Laufende Segmentnummer im Guide; MaxWdh = Maximale Wiederholung; St = Status (M=Muss/Mandatory, C=Conditional, R=Erforderlich/Required, O=Optional, D=Abhängig von/Dependent, A=Empfohlen/Advised)

COPYRIGHT VDA 2026

Segmente

Nr	Bez	St	MaxWdh	Name
	SG14	O	1000	List of individual handling units
84	PCI	M	1	Handling unit label type

Standard				Implementierung		
Bez	Name	St	Format	St	Format	Anwendung / Bemerkung
4233	Marking instructions code	C	an..3	O	an..3	Code is placeholder only, as DE 4233 is assigned status "M". 3 - customer sent data, received in the delivery instruction, to be printed as data matrix code DMC on the label in section E2 (see VDA 4994 for reference) 16 - customer sent data from the delivery instruction, to be printed as text on the label in section E2 (see VDA 4994 for reference). 17 - any other situation **3** Mark customers references **16** Buyer's instructions **17** Seller's instructions
C210	Marks & labels	C		O		
7102	Shipping marks description	M	an..35	M	an..35	Additional marks/texts used on master label (e.g. line handling code (VW)).
7102	Shipping marks description	C	an..35	O	an..35	See 7102#1
7102	Shipping marks description	C	an..35	O	an..35	See 7102#1
7102	Shipping marks description	C	an..35	O	an..35	See 7102#1
7102	Shipping marks description	C	an..35	O	an..35	See 7102#1
7102	Shipping marks description	C	an..35	O	an..35	See 7102#1
7102	Shipping marks description	C	an..35	O	an..35	See 7102#1
7102	Shipping marks description	C	an..35	O	an..35	See 7102#1
7102	Shipping marks description	C	an..35	O	an..35	See 7102#1
7102	Shipping marks description	C	an..35	O	an..35	See 7102#1
8169	Full or empty indicator code	C	an..3	N		Nicht genutzt
C827	Type of marking	C		O		
7511	Marking type code	M	an..3	R	an..3	Handling Unit Category First part of transport label. This identifier indicates whether the label is applied to the outer or the inner packaging. For outer packaging labels, a distinction is made between a master label and a mixed load label. 6J corresponds to former code "M" = master label 5J corresponds to former code "G" = master mixed load **5J** Unique license plate number assigned to a transport handling unit with inner handling units, packed with unlike items. JAI019 **6J** Unique license plate number assigned to a transport handling unit with inner handling units, all packed with like items. JAI019 **3J** Unique license plate number - JIS handling unit with trays JAI019 **4J** Unique license plate number - JIS handling unit with 1..n JIS packages JAI019
1131	Code list identification code	C	an..17	N		Nicht genutzt
3055	Code list responsible agency code	C	an..3	O	an..3	

Bez =Bezeichner; Nr = Laufende Segmentnummer im Guide; MaxWdh = Maximale Wiederholung; St = Status (M=Muss/Mandatory, C=Conditional, R=Erforderlich/Required, O=Optional, D=Abhängig von/Dependent, A=Empfohlen/Advised)

COPYRIGHT VDA 2026

Segmente

Standard				Implementierung	
Bez	Name	St	Format	St	Format Anwendung / Bemerkung
				5	ISO (International Organization for Standardization)

Each segment group 13 represents exactly one handling unit with its components/properties
Beispiel:

```
PCI+17+Versandmarkierung:Versandmarkierung:Versandmarkierung:Versandmarkierung:Versandmarkierung:Versandmarkierung:Versandmarkierung:Versandmarkierung:Versandmarkierung++5J::5'
```

Bez =Bezeichner; Nr = Laufende Segmentnummer im Guide; MaxWdh = Maximale Wiederholung; St = Status (M=Muss/Mandatory, C=Conditional, R=Erforderlich/Required, O=Optional, D=Abhängig von/Dependent, A=Empfohlen/Advised)

COPYRIGHT VDA 2026

Segmente

Nr	Bez	St	MaxWdh	Name
	SG16	R	2	Individual handling unit's transport label number
85	GIN	M	1	Individual handling unit's transport label number

Standard				Implementierung		
Bez	Name	St	Format	St	Format	Anwendung / Bemerkung
7405	Object identification code qualifier	M	an..3	M	an..3	ML = Label ID of supplier BU = Label ID specified by customer (e.g. LHM number, manifest number) **BU** Package buyer assigned identifier **ML** Marking/label number
C208	Identity number range	M		M		
7402	Object identifier	M	an..35	M	n..9	Label ID of the logistics package unit assigned by shipper(e.g. 000012345). Packages include also compartments in a JIS container or a virtual container (se process documentation and packaging examples). If the license plate is used (globally unique package ID) then it is strongly advised to use the second DE 7402 as well to transmit the complete ID. With regard to existing legacy systems only numeric values with up to 9 digits shall be used.
7402	Object identifier	C	an..35	D	an..22	For material deliveries 5J and 6J are used as DI. These DI have a length restriction of 20 characters without DI. Label ID of the handling unit (license plate), consisting of the issuing agency code (IAC) (e.g. UN for Dun & Breadstreet), the company code of the shipper (e.g. DUNS number) plus the unique ID of the shipping unit assigned by shipper, who was identified e.g. with the DUNS number (e.g. 000012345) => UN123456789000012345 The format ist either an..20 for the example as shown above or an..22 in case the data identifier is included (e.g. 6J). The format consists of: DI: an2 (optional) IAC: an2 CID: an..9 SN: n..9 Im JIS-Prozess werden die DI 1J, 3J und 4J verwendet, die maximal 35 Zeichen ohne DI zulassen. Oft werden hier vom Kunden besondere Bildungsvorschriften vergeben, die zu beachten sind. If the content of the message is used to generate labels or shipping documents, then transmitting the complete ID is strongly recommended. Handling units and packages shall be identifyable by globally unique identifiers. This data element is amongs other purposes used by form generators to print these unique identifiers.
C208	Identity number range	C		N		Nicht genutzt
7402	Object identifier	M	an..35	N		Nicht genutzt
7402	Object identifier	C	an..35	N		Nicht genutzt
C208	Identity number range	C		N		Nicht genutzt
7402	Object identifier	M	an..35	N		Nicht genutzt
7402	Object identifier	C	an..35	N		Nicht genutzt
C208	Identity number range	C		N		Nicht genutzt
7402	Object identifier	M	an..35	N		Nicht genutzt
7402	Object identifier	C	an..35	N		Nicht genutzt

Bez =Bezeichner; Nr = Laufende Segmentnummer im Guide; MaxWdh = Maximale Wiederholung; St = Status (M=Muss/Mandatory, C=Conditional, R=Erforderlich/Required, O=Optional, D=Abhängig von/Dependent, A=Empfohlen/Advised)

COPYRIGHT VDA 2026

Segmente

Standard				Implementierung		
Bez	Name	St	Format	St	Format	Anwendung / Bemerkung
C208	Identity number range	C		N		Nicht genutzt
7402	Object identifier	M	an..35	N		Nicht genutzt
7402	Object identifier	C	an..35	N		Nicht genutzt

The unique identifier of a loading unit usually consists of the Data Identifier (e.g. 5J), the Company Identification Number of the ship from (e.g. UN987654321 for the DUNS number) and the serial number of the shipping unit.
Beispiel:

GIN+ML+12345:UN123456789000012345'

Bez =Bezeichner; Nr = Laufende Segmentnummer im Guide; MaxWdh = Maximale Wiederholung; St = Status (M=Muss/Mandatory, C=Conditional, R=Erforderlich/Required, O=Optional, D=Abhängig von/Dependent, A=Empfohlen/Advised)

COPYRIGHT VDA 2026

Segmente

Nr	Bez	St	MaxWdh	Name
	SG16	O	1	Package identification, assigned by the logistics service provider
86	GIN	M	1	Package identification, assigned by the logistics service provider

Standard				Implementierung		
Bez	Name	St	Format	St	Format	Anwendung / Bemerkung
7405	Object identification code qualifier	M	an..3	M	an..3	**X01** Package identification, assigned by the logistics service provider 7405
C208	Identity number range	M		M		
7402	Object identifier	M	an..35	M	an..35	Package identification, assigned by the logistics service provider
7402	Object identifier	C	an..35	N		Nicht genutzt
C208	Identity number range	C		N		Nicht genutzt
7402	Object identifier	M	an..35	N		Nicht genutzt
7402	Object identifier	C	an..35	N		Nicht genutzt
C208	Identity number range	C		N		Nicht genutzt
7402	Object identifier	M	an..35	N		Nicht genutzt
7402	Object identifier	C	an..35	N		Nicht genutzt
C208	Identity number range	C		N		Nicht genutzt
7402	Object identifier	M	an..35	N		Nicht genutzt
7402	Object identifier	C	an..35	N		Nicht genutzt
C208	Identity number range	C		N		Nicht genutzt
7402	Object identifier	M	an..35	N		Nicht genutzt
7402	Object identifier	C	an..35	N		Nicht genutzt

Beispiel:

```
GIN+X01+54321'
```

Bez =Bezeichner; Nr = Laufende Segmentnummer im Guide; MaxWdh = Maximale Wiederholung; St = Status (M=Muss/Mandatory, C=Conditional, R=Erforderlich/Required, O=Optional, D=Abhängig von/Dependent, A=Empfohlen/Advised)

COPYRIGHT VDA 2026

Segmente

Nr	Bez	St	MaxWdh	Name
87	UNT	M	1	Message trailer

Standard				Implementierung		
Bez	Name	St	Format	St	Format	Anwendung / Bemerkung
0074	Number of segments in the message	M	n..6	M	n..6	Number of segments in the message
0062	Message reference number	M	an..14	M	an..14	Message reference number

Beispiel:

```
UNT+69+9'
```

Bez =Bezeichner; Nr = Laufende Segmentnummer im Guide; MaxWdh = Maximale Wiederholung; St = Status (M=Muss/Mandatory, C=Conditional, R=Erforderlich/Required, O=Optional, D=Abhängig von/Dependent, A=Empfohlen/Advised)

COPYRIGHT VDA 2026

Segmente

Nr	Bez	St	MaxWdh	Name
88	UNZ	M	1	Interchange trailer

Standard				Implementierung		
Bez	Name	St	Format	St	Format	Anwendung / Bemerkung
0036	Interchange control count	M	n..6	M	n..6	
0020	Interchange control reference	M	an..14	M	an..14	

Beispiel:

```
UNZ+1+2022000025'
```

Bez =Bezeichner; Nr = Laufende Segmentnummer im Guide; MaxWdh = Maximale Wiederholung; St = Status (M=Muss/Mandatory, C=Conditional, R=Erforderlich/Required, O=Optional, D=Abhängig von/Dependent, A=Empfohlen/Advised)

COPYRIGHT VDA 2026

Applicable codes

0001 Syntax identifier

Code	Name/description	Code list
UNOA	UN/ECE level A	0001
UNOB	UN/ECE level B	0001
UNOC	UN/ECE level C	0001
UNOD	UN/ECE level D	0001
UNOW	UN/ECE level W	0001

0002 Syntax version number

Code	Name/description	Code list
X	Syntax version 4 ISO 9735-11 profile.	0002

0007 Partner identification code qualifier

Code	Name/description	Code list
1	DUNS (Data Universal Numbering System)	0007
4	IATA (International Air Transport Association)	0007
5	INSEE (Institut National de la Statistique et des Etudes Economiques) - SIRET	0007
8	UCC Communications ID (Uniform Code Council Communications Identifier)	0007
9	DUNS (Data Universal Numbering System) with 4 digit suffix	0007
12	Telephone number	0007
14	GS1	0007
18	AIAG (Automotive Industry Action Group)	0007
22	INSEE (Institut National de la Statistique et des Etudes Economiques) - SIREN	0007
30	ISO 6523: Organization identification	0007
31	DIN (Deutsches Institut fuer Normung)	0007
33	BfA (Bundesversicherungsanstalt fuer Angestellte)	0007
34	National Statistical Agency	0007
51	GEIS (General Electric Information Services)	0007
52	INS (IBM Network Services)	0007
53	Datenzentrale des Einzelhandels	0007
54	Bundesverband der Deutschen Baustoffhaendler	0007
55	Bank identifier code	0007
57	KTNet (Korea Trade Network Services)	0007
58	UPU (Universal Postal Union)	0007
59	ODETTE (Organization for Data Exchange through Tele- Transmission in Europe)	0007
61	SCAC (Standard Carrier Alpha Code)	0007
63	ECA (Electronic Commerce Australia)	0007
65	TELEBOX 400 (Deutsche Telekom)	0007
80	NHS (National Health Service)	0007
82	Statens Teleforvaltning	0007
84	Athens Chamber of Commerce	0007
85	Swiss Chamber of Commerce	0007
86	US Council for International Business	0007
87	National Federation of Chambers of Commerce and Industry	0007
89	Association of British Chambers of Commerce	0007
90	SITA (Societe Internationale de Telecommunications Aeronautiques)	0007
91	Assigned by seller or seller's agent	0007
92	Assigned by buyer or buyer's agent	0007
103	TW, Trade-van	0007
128	CH, BCNR (Swiss Clearing Bank Number)	0007
129	CH, BPI (Swiss Business Partner Identification)	0007
144	US, DoDAAC (Department of Defense Activity Address Code)	0007
145	FR, DGCP (Direction Generale de la Comptabilite Publique)	0007
146	FR, DGI (Direction Generale des Impots)	0007
147	JP, JIPDEC/ECPC (Japan Information Processing Development Corporation / Electronic Commerce Promotion Center)	0007

COPYRIGHT VDA 2026

Applicable codes

Code	Name/description	Code list
148	ITU (International Telecommunications Union) Data Network Identification Code (DNIC)	0007
500	DE, BDEW (Bundesverband der Energie- und Wasserwirtschaft e.V.)	0007
501	EASEE-gas (European Association for the Streamlining of Energy Exchange)	0007
502	DE, DVGW (Deutsche Vereinigung des Gas- und Wasserfaches e.V.)	0007
Z01	Vehicle registration number	0007
ZZZ	Mutually defined	0007
0035	Test indicator	
Code	Name/description	Code list
1	Interchange is a test	0035
0051	Controlling agency	
Code	Name/description	Code list
UN	UN/CEFACT	0051
0052	Message version number	
Code	Name/description	Code list
D	Draft version/UN/EDIFACT Directory	0052
0054	Message release number	
Code	Name/description	Code list
20B	Release 2020 - B	0054
0057	Association assigned code	
Code	Name/description	Code list
GAVL22	VDA DESADV - Transport Order Confirmation V2.2	JAI016
0065	Message type	
Code	Name/description	Code list
DESADV	Despatch advice message	0065
1001	Document name code	
Code	Name/description	Code list
X01	Transport order confirmation, materials - DESADV	ODDC001(1)
1153	Reference code qualifier	
Code	Name/description	Code list
ABE	Declarant's reference number	1153
ABT	Goods declaration document identifier, Customs	1153
AFC	Bordereau number	1153
AHI	Transport contract reference number	1153
AKI	Ordering customer's second reference number	1153
ANK	Reference number assigned by third party	1153
AOZ	Implementation version number	1153
AVU	Unique goods shipment identifier	1153
CRN	Transport means journey identifier	1153
FC	Fiscal number	1153
FF	Consignment identifier, freight forwarder assigned	1153
PE	Plant number	1153
TIN	Transport instruction number	1153
VA	VAT registration number	1153
1225	Message function code	
Code	Name/description	Code list
O9	Original transport order confirmation displays a shipment split	ODDC134(1)
1	Cancellation	1225
5	Replace	1225
9	Original	1225

COPYRIGHT VDA 2026

Applicable codes

Code	Name/description	Code list
27	Not accepted	1225
2005	**Date or time or period function code qualifier**	
Code	Name/description	Code list
2	Delivery date/time, requested	2005
10	Shipment date/time, requested	2005
69	Delivery date time, promised before	2005
79	Shipment date/time, promised for	2005
137	Document issue date time	2005
2379	**Date or time or period format code**	
Code	Name/description	Code list
102	CCYYMMDD	2379
203	CCYYMMDDHHMM	2379
205	CCYYMMDDHHMMZHHMM	2379
719	CCYYMMDDHHMM-CCYYMMDDHHMM	2379
721	CCYYMMDDHHMMZHHMM-CCYYMMDDHHMMZHHMM	2379
3035	**Party function code qualifier**	
Code	Name/description	Code list
BY	Buyer	3035
CA	Carrier	3035
FW	Freight forwarder	3035
FZ	Grouping centre	3035
SE	Seller	3035
SF	Ship from	3035
ST	Ship to	3035
UD	Ultimate customer	3035
3055	**Code list responsible agency code**	
Code	Name/description	Code list
1	CCC (Customs Co-operation Council)	3055
2	CEC (Commission of the European Communities)	3055
3	IATA (International Air Transport Association)	3055
4	ICC (International Chamber of Commerce)	3055
5	ISO (International Organization for Standardization)	3055
6	UN/ECE (United Nations - Economic Commission for Europe)	3055
7	CEFIC (Conseil Europeen des Federations de l'Industrie Chimique)	3055
8	EDIFICE	3055
9	EAN (International Article Numbering association)	3055
10	ODETTE	3055
11	Lloyd's register of shipping	3055
12	UIC (International union of railways)	3055
13	ICAO (International Civil Aviation Organization)	3055
14	ICS (International Chamber of Shipping)	3055
15	RINET (Reinsurance and Insurance Network)	3055
16	US, D&B (Dun & Bradstreet Corporation)	3055
17	S.W.I.F.T.	3055
18	Conventions on SAD and transit (EC and EFTA)	3055
19	FRRC (Federal Reserve Routing Code)	3055
20	BIC (Bureau International des Containeurs)	3055
21	Assigned by transport company	3055
22	US, ISA (Information Systems Agreement)	3055
23	FR, EDITRANSPORT	3055
24	AU, ROA (Railways of Australia)	3055
25	EDITEX (Europe)	3055

COPYRIGHT VDA 2026

Applicable codes

Code	Name/description	Code list
26	NL, Foundation Uniform Transport Code	3055
27	US, FDA (Food and Drug Administration)	3055
28	EDITEUR (European book sector electronic data interchange group)	3055
29	GB, FLEETNET	3055
30	GB, ABTA (Association of British Travel Agencies)	3055
31	FI, Finish State Railway	3055
32	PL, Polish State Railway	3055
33	BG, Bulgaria State Railway	3055
34	RO, Rumanian State Railway	3055
35	CZ, Tchechian State Railway	3055
36	HU, Hungarian State Railway	3055
37	GB, British Railways	3055
38	ES, Spanish National Railway	3055
39	SE, Swedish State Railway	3055
40	NO, Norwegian State Railway	3055
41	DE, German Railway	3055
42	AT, Austrian Federal Railways	3055
43	LU, Luxembourg National Railway Company	3055
44	IT, Italian State Railways	3055
45	NL, Netherlands Railways	3055
46	CH, Swiss Federal Railways	3055
47	DK, Danish State Railways	3055
48	FR, French National Railway Company	3055
49	BE, Belgian National Railway Company	3055
50	PT, Portuguese Railways	3055
51	SK, Slovakian State Railways	3055
52	IE, Irish Transport Company	3055
53	FIATA (International Federation of Freight Forwarders Associations)	3055
54	IMO (International Maritime Organisation)	3055
55	US, DOT (United States Department of Transportation)	3055
56	TW, Trade-van	3055
57	TW, Chinese Taipei Customs	3055
58	EUROFER	3055
59	DE, EDIBAU	3055
60	Assigned by national trade agency	3055
61	Association Europeenne des Constructeurs de Materiel Aerospatial (AECMA)	3055
62	US, DIstilled Spirits Council of the United States (DISCUS)	3055
63	North Atlantic Treaty Organization (NATO)	3055
64	FR, EDIFRANCE	3055
65	FR, GENCOD	3055
66	MY, Malaysian Customs and Excise	3055
67	MY, Malaysia Central Bank	3055
68	IT, INDICOD/EAN Italy	3055
69	US, National Alcohol Beverage Control Association (NABCA)	3055
70	MY, Dagang.Net	3055
71	US, FCC (Federal Communications Commission)	3055
72	US, MARAD (Maritime Administration)	3055
73	US, DSAA (Defense Security Assistance Agency)	3055
74	US, NRC (Nuclear Regulatory Commission)	3055
75	US, ODTC (Office of Defense Trade Controls)	3055
76	US, ATF (Bureau of Alcohol, Tobacco and Firearms)	3055
77	US, BXA (Bureau of Export Administration)	3055
78	US, FWS (Fish and Wildlife Service)	3055
79	US, OFAC (Office of Foreign Assets Control)	3055
80	BRMA/RAA - LIMNET - RINET Joint Venture	3055

COPYRIGHT VDA 2026

Applicable codes

Code	Name/description	Code list
81	RU, (SFT) Society for Financial Telecommunications	3055
82	NO, Enhetsregisteret ved Bronnoysundregisterne	3055
83	US, National Retail Federation	3055
84	DE, BRD (Gesetzgeber der Bundesrepublik Deutschland)	3055
85	North America, Telecommunications Industry Forum	3055
86	Assigned by party originating the message	3055
87	Assigned by carrier	3055
88	Assigned by owner of operation	3055
89	Assigned by distributor	3055
90	Assigned by manufacturer	3055
91	Assigned by seller or seller's agent	3055
92	Assigned by buyer or buyer's agent	3055
93	AT, Austrian Customs	3055
94	AT, Austrian PTT	3055
95	AU, Australian Customs Service	3055
96	CA, Revenue Canada, Customs and Excise	3055
97	CH, Administration federale des contributions	3055
98	CH, Direction generale des douanes	3055
99	CH, Division des importations et exportations, OFAEE	3055
100	CH, Entreprise des PTT	3055
101	CH, Carbura	3055
102	CH, Centrale suisse pour l'importation du charbon	3055
103	CH, Office fiduciaire des importateurs de denrees alimentaires	3055
104	CH, Association suisse code des articles	3055
105	DK, Ministry of taxation, Central Customs and Tax Administration	3055
106	FR, Direction generale des douanes et droits indirects	3055
107	FR, INSEE	3055
108	FR, Banque de France	3055
109	GB, H.M. Customs & Excise	3055
110	IE, Revenue Commissioners, Customs AEP project	3055
111	US, U.S. Customs Service	3055
112	US, U.S. Census Bureau	3055
113	US, UCC (Uniform Code Council)	3055
114	US, ABA (American Bankers Association)	3055
115	US, DODAAC (Department Of Defense Active Agency Code)	3055
116	US, ANSI ASC X12	3055
117	AT, Geldausgabeautomaten-Service Gesellschaft m.b.H.	3055
118	SE, Svenska Bankfoereningen	3055
119	IT, Associazione Bancaria Italiana	3055
120	IT, Socieata' Interbancaria per l'Automazione	3055
121	CH, Telekurs AG	3055
122	CH, Swiss Securities Clearing Corporation	3055
123	NO, Norwegian Interbank Research Organization	3055
124	NO, Norwegian Bankers' Association	3055
125	FI, The Finnish Bankers' Association	3055
126	US, NCCMA (Account Analysis Codes)	3055
127	DE, ARE (AbRechnungs Einheit)	3055
128	BE, Belgian Bankers' Association	3055
129	BE, Belgian Ministry of Finance	3055
130	DK, Danish Bankers Association	3055
131	DE, German Bankers Association	3055
132	GB, BACS Limited	3055
133	GB, Association for Payment Clearing Services	3055
134	GB, APACS (Association of payment clearing services)	3055
135	GB, The Clearing House	3055

COPYRIGHT VDA 2026

Applicable codes

Code	Name/description	Code list
136	GB, Article Number Association (UK) Limited	3055
137	AT, Verband oesterreichischer Banken und Bankiers	3055
138	FR, CFONB (Comite francais d'organ. et de normalisation bancaires)	3055
139	UPU (Universal Postal Union)	3055
140	CEC (Commission of the European Communities), DG/XXI-01	3055
141	CEC (Commission of the European Communities), DG/XXI-B-1	3055
142	CEC (Commission of the European Communities), DG/XXXIV	3055
143	NZ, New Zealand Customs	3055
144	NL, Netherlands Customs	3055
145	SE, Swedish Customs	3055
146	DE, German Customs	3055
147	BE, Belgian Customs	3055
148	ES, Spanish Customs	3055
149	IL, Israel Customs	3055
150	HK, Hong Kong Customs	3055
151	JP, Japan Customs	3055
152	SA, Saudi Arabia Customs	3055
153	IT, Italian Customs	3055
154	GR, Greek Customs	3055
155	PT, Portuguese Customs	3055
156	LU, Luxembourg Customs	3055
157	NO, Norwegian Customs	3055
158	FI, Finnish Customs	3055
159	IS, Iceland Customs	3055
160	LI, Liechtenstein authority	3055
161	UNCTAD (United Nations - Conference on Trade And Development)	3055
162	CEC (Commission of the European Communities), DG/XIII-D-5	3055
163	US, FMC (Federal Maritime Commission)	3055
164	US, DEA (Drug Enforcement Agency)	3055
165	US, DCI (Distribution Codes, INC.)	3055
166	US, National Motor Freight Classification Association	3055
167	US, AIAG (Automotive Industry Action Group)	3055
168	US, FIPS (Federal Information Publishing Standard)	3055
169	CA, SCC (Standards Council of Canada)	3055
170	CA, CPA (Canadian Payment Association)	3055
171	NL, Interpay Girale Services	3055
172	NL, Interpay Debit Card Services	3055
173	NO, NORPRO	3055
174	DE, DIN (Deutsches Institut fuer Normung)	3055
175	FCI (Factors Chain International)	3055
176	BR, Banco Central do Brazil	3055
177	AU, LIFA (Life Insurance Federation of Australia)	3055
178	AU, SAA (Standards Association of Australia)	3055
179	US, Air transport association of America	3055
180	DE, BIA (Berufsgenossenschaftliches Institut fuer Arbeitssicherheit)	3055
181	Edibuild	3055
182	US, Standard Carrier Alpha Code (Motor)	3055
183	US, American Petroleum Institute	3055
184	AU, ACOS (Australian Chamber of Shipping)	3055
185	DE, BDI (Bundesverband der Deutschen Industrie e.V.)	3055
186	US, GSA (General Services Administration)	3055
187	US, DLMSO (Defense Logistics Management Standards Office)	3055
188	US, NIST (National Institute of Standards and Technology)	3055
189	US, DoD (Department of Defense)	3055
190	US, VA (Department of Veterans Affairs)	3055

COPYRIGHT VDA 2026

Applicable codes

Code	Name/description	Code list
191	IAPSO (United Nations Inter-Agency Procurement Services Office)	3055
192	Shipper's association	3055
193	EU, European Telecommunications Informatics Services (ETIS)	3055
194	AU, AQIS (Australian Quarantine and Inspection Service)	3055
195	CO, DIAN (Direccion de Impuestos y Aduanas Nacionales)	3055
196	US, COPAS (Council of Petroleum Accounting Society)	3055
197	US, DISA (Data Interchange Standards Association)	3055
198	CO, Superintendencia Bancaria De Colombia	3055
199	FR, Direction de la Comptabilite Publique	3055
200	NL, EAN Netherlands	3055
201	US, WSSA(Wine and Spirits Shippers Association)	3055
202	PT, Banco de Portugal	3055
203	FR, GALIA (Groupement pour l'Amelioration des Liaisons dans l'Industrie Automobile)	3055
204	DE, VDA (Verband der Automobilindustrie E.V.)	3055
205	IT, ODETTE Italy	3055
206	NL, ODETTE Netherlands	3055
207	ES, ODETTE Spain	3055
208	SE, ODETTE Sweden	3055
209	GB, ODETTE United Kingdom	3055
210	EU, EDI for financial, informational, cost, accounting, auditing and social areas (EDIFICAS) - Europe	3055
211	FR, EDI for financial, informational, cost, accounting, auditing and social areas (EDIFICAS) - France	3055
212	DE, Deutsch Telekom AG	3055
213	JP, NACCS Center (Nippon Automated Cargo Clearance System Operations Organization)	3055
214	US, AISI (American Iron and Steel Institute)	3055
215	AU, APCA (Australian Payments Clearing Association)	3055
216	US, Department of Labor	3055
217	US, N.A.I.C. (National Association of Insurance Commissioners)	3055
218	GB, The Association of British Insurers	3055
219	FR, d'ArvA	3055
220	FI, Finnish tax board	3055
221	FR, CNAMTS (Caisse Nationale de l'Assurance Maladie des Travailleurs Salaries)	3055
222	DK, Danish National Board of Health	3055
223	DK, Danish Ministry of Home Affairs	3055
224	US, Aluminum Association	3055
225	US, CIDX (Chemical Industry Data Exchange)	3055
226	US, Carbide Manufacturers	3055
227	US, NWDA (National Wholesale Druggist Association)	3055
228	US, EIA (Electronic Industry Association)	3055
229	US, American Paper Institute	3055
230	US, VICS (Voluntary Inter-Industry Commerce Standards)	3055
231	Copper and Brass Fabricators Council	3055
232	GB, Inland Revenue	3055
233	US, OMB (Office of Management and Budget)	3055
234	DE, Siemens AG	3055
235	AU, Tradegate (Electronic Commerce Australia)	3055
236	US, United States Postal Service (USPS)	3055
237	US, United States health industry	3055
238	US, TDCC (Transportation Data Coordinating Committee)	3055
239	US, HL7 (Health Level 7)	3055
240	US, CHIPS (Clearing House Interbank Payment Systems)	3055
241	PT, SIBS (Sociedade Interbancaria de Servicos)	3055
242	NL, Interpay Giraal	3055

COPYRIGHT VDA 2026

Applicable codes

Code	Name/description	Code list
243	NL, Interpay Cards	3055
244	US, Department of Health and Human Services	3055
245	DK, EAN (European Article Numbering) Denmark	3055
246	DE, Centrale fuer Coorganisation GMBH	3055
247	US, HBICC (Health Industry Business Communication Council)	3055
248	US, ASTM (American Society of Testing and Materials)	3055
249	IP (Institute of Petroleum)	3055
250	US, UOP (Universal Oil Products)	3055
251	AU, HIC (Health Insurance Commission)	3055
252	AU, AIHW (Australian Institute of Health and Welfare)	3055
253	AU, NCCH (National Centre for Classification in Health)	3055
254	AU, DOH (Australian Department of Health)	3055
255	AU, ADA (Australian Dental Association)	3055
256	US, AAR (Association of American Railroads)	3055
257	ECCMA (Electronic Commerce Code Management Association)	3055
258	JP, Japanese Ministry of Transport	3055
259	JP, Japanese Maritime Safety Agency	3055
260	Ediel Nordic forum	3055
261	EEG7, European Expert Group 7 (Insurance)	3055
262	DE, GDV (Gesamtverband der Deutschen Versicherungswirtschaft e.V.)	3055
263	CA, CSIO (Centre for Study of Insurance Operations)	3055
264	FR, AGF (Assurances Generales de France)	3055
265	SE, Central bank	3055
266	US, DoA (Department of Agriculture)	3055
267	RU, Central Bank of Russia	3055
268	FR, DGI (Direction Generale des Impots)	3055
269	GRE (Reference Group of Experts)	3055
270	Concord EDI group	3055
271	InterContainer InterFrigo	3055
272	Joint Automotive Industry agency	3055
273	CH, SCC (Swiss Chambers of Commerce)	3055
274	ITIGG (International Transport Implementation Guidelines Group)	3055
275	ES, Banco de España	3055
276	Assigned by Port Community	3055
277	BIGNet (Business Information Group Network)	3055
278	Eurogate	3055
279	NL, Graydon	3055
280	FR, Euler	3055
281	ICODIF/EAN Belgium-Luxembourg	3055
282	DE, Creditreform International e.V.	3055
283	DE, Hermes Kreditversicherungs AG	3055
284	TW, Taiwanese Bankers' Association	3055
285	ES, Asociación Española de Banca	3055
286	SE, TCO (Tjänstemännes Central Organisation)	3055
287	DE, FORTRAS (Forschungs- und Entwicklungsgesellschaft für Transportwesen GMBH)	3055
288	OSJD (Organizacija Sotrudnichestva Zeleznih Dorog)	3055
289	JP,JIPDEC/ECPC (Japan Information Processing Development Center / Electronic Commerce Promotion Center)	3055
290	JP, JAMA	3055
291	JP, JAPIA	3055
292	FI, TIEKE The Information Technology Development Centre of Finland	3055
293	DE, VDEW (Verband der Elektrizitatswirtschaft)	3055
294	AT, EAN Austria	3055
295	AU, Australian Therapeutic Goods Administration	3055
ADE	Account number	3055

COPYRIGHT VDA 2026

Applicable codes

Code	Name/description	Code list
ANK	Reference number assigned by third party	3055
O10	Party identifier assigned by ODETTE	3055
O91	Assigned by the provider of the empty packaging	3055
O92	Assigned by the receiver of the empty packaging	3055
O99	Packaging Manager Account Number	3055
PE	Plant number	3055
VA	VAT registration number	3055
ZZZ	Mutually defined	3055
1	CCC (Customs Co-operation Council)	3055
2	CEC (Commission of the European Communities)	3055
3	IATA (International Air Transport Association)	3055
4	ICC (International Chamber of Commerce)	3055
5	ISO (International Organization for Standardization)	3055
6	UN/ECE (United Nations - Economic Commission for Europe)	3055
7	CEFIC (Conseil Europeen des Federations de l'Industrie Chimique)	3055
8	EDIFICE	3055
9	GS1	3055
10	ODETTE	3055
11	Lloyd's register of shipping	3055
12	UIC (International union of railways)	3055
13	ICAO (International Civil Aviation Organization)	3055
14	ICS (International Chamber of Shipping)	3055
15	RINET (Reinsurance and Insurance Network)	3055
16	US, D&B (Dun & Bradstreet Corporation)	3055
17	S.W.I.F.T.	3055
18	Conventions on SAD and transit (EC and EFTA)	3055
19	FRRC (Federal Reserve Routing Code)	3055
20	BIC (Bureau International des Containeurs)	3055
21	Assigned by transport company	3055
22	US, ISA (Information Systems Agreement)	3055
23	FR, EDITRANSPORT	3055
24	AU, ROA (Railways of Australia)	3055
25	EDITEX (Europe)	3055
26	NL, Foundation Uniform Transport Code	3055
27	US, FDA (Food and Drug Administration)	3055
28	EDITEUR (European book sector electronic data interchange group)	3055
29	GB, FLEETNET	3055
30	GB, ABTA (Association of British Travel Agencies)	3055
31	FI, Finish State Railway	3055
32	PL, Polish State Railway	3055
33	BG, Bulgaria State Railway	3055
34	RO, Rumanian State Railway	3055
35	CZ, Tchechian State Railway	3055
36	HU, Hungarian State Railway	3055
37	GB, British Railways	3055
38	ES, Spanish National Railway	3055
39	SE, Swedish State Railway	3055
40	NO, Norwegian State Railway	3055
41	DE, German Railway	3055
42	AT, Austrian Federal Railways	3055
43	LU, Luxembourg National Railway Company	3055
44	IT, Italian State Railways	3055
45	NL, Netherlands Railways	3055
46	CH, Swiss Federal Railways	3055
47	DK, Danish State Railways	3055

COPYRIGHT VDA 2026

Applicable codes

Code	Name/description	Code list
48	FR, French National Railway Company	3055
49	BE, Belgian National Railway Company	3055
50	PT, Portuguese Railways	3055
51	SK, Slovakian State Railways	3055
52	IE, Irish Transport Company	3055
53	FIATA (International Federation of Freight Forwarders Associations)	3055
54	IMO (International Maritime Organisation)	3055
55	US, DOT (United States Department of Transportation)	3055
56	TW, Trade-van	3055
57	TW, Chinese Taipei Customs	3055
58	EUROFER	3055
59	DE, EDIBAU	3055
60	Assigned by national trade agency	3055
61	Association Europeenne des Constructeurs de Materiel Aerospatial (AECMA)	3055
62	US, DIstilled Spirits Council of the United States (DISCUS)	3055
63	North Atlantic Treaty Organization (NATO)	3055
64	FR, CLEEP	3055
65	GS1 France	3055
66	MY, Malaysian Customs and Excise	3055
67	MY, Malaysia Central Bank	3055
68	GS1 Italy	3055
69	US, National Alcohol Beverage Control Association (NABCA)	3055
70	MY, Dagang.Net	3055
71	US, FCC (Federal Communications Commission)	3055
72	US, MARAD (Maritime Administration)	3055
73	US, DSAA (Defense Security Assistance Agency)	3055
74	US, NRC (Nuclear Regulatory Commission)	3055
75	US, ODTC (Office of Defense Trade Controls)	3055
76	US, ATF (Bureau of Alcohol, Tobacco and Firearms)	3055
77	US, BXA (Bureau of Export Administration)	3055
78	US, FWS (Fish and Wildlife Service)	3055
79	US, OFAC (Office of Foreign Assets Control)	3055
80	BRMA/RAA - LIMNET - RINET Joint Venture	3055
81	RU, (SFT) Society for Financial Telecommunications	3055
82	NO, Enhetsregisteret ved Bronnoysundregisterne	3055
83	US, National Retail Federation	3055
84	DE, BRD (Gesetzgeber der Bundesrepublik Deutschland)	3055
85	North America, Telecommunications Industry Forum	3055
86	Assigned by party originating the message	3055
87	Assigned by carrier	3055
88	Assigned by owner of operation	3055
89	Assigned by distributor	3055
90	Assigned by manufacturer	3055
91	Assigned by seller or seller's agent	3055
92	Assigned by buyer or buyer's agent	3055
93	AT, Austrian Customs	3055
94	AT, Austrian PTT	3055
95	AU, Australian Customs Service	3055
96	CA, Revenue Canada, Customs and Excise	3055
97	CH, Administration federale des contributions	3055
98	CH, Direction generale des douanes	3055
99	CH, Division des importations et exportations, OFAEE	3055
100	CH, Entreprise des PTT	3055
101	CH, Carbura	3055
102	CH, Centrale suisse pour l'importation du charbon	3055

COPYRIGHT VDA 2026

Applicable codes

Code	Name/description	Code list
103	CH, Office fiduciaire des importateurs de denrees alimentaires	3055
104	CH, Association suisse code des articles	3055
105	DK, Ministry of taxation, Central Customs and Tax Administration	3055
106	FR, Direction generale des douanes et droits indirects	3055
107	FR, INSEE	3055
108	FR, Banque de France	3055
109	GB, H.M. Customs & Excise	3055
110	IE, Revenue Commissioners, Customs AEP project	3055
111	US, U.S. Customs Service	3055
112	US, U.S. Census Bureau	3055
113	GS1 US	3055
114	US, ABA (American Bankers Association)	3055
116	US, ANSI ASC X12	3055
117	AT, Geldausgabeautomaten-Service Gesellschaft m.b.H.	3055
118	SE, Svenska Bankfoereningen	3055
119	IT, Associazione Bancaria Italiana	3055
120	IT, Socieata' Interbancaria per l'Automazione	3055
121	CH, Telekurs AG	3055
122	CH, Swiss Securities Clearing Corporation	3055
123	NO, Norwegian Interbank Research Organization	3055
124	NO, Norwegian Bankers' Association	3055
125	FI, The Finnish Bankers' Association	3055
126	US, NCCMA (Account Analysis Codes)	3055
127	DE, ARE (AbRechnungs Einheit)	3055
128	BE, Belgian Bankers' Association	3055
129	BE, Belgian Ministry of Finance	3055
130	DK, Danish Bankers Association	3055
131	DE, German Bankers Association	3055
132	GB, BACS Limited	3055
133	GB, Association for Payment Clearing Services	3055
134	GB, APACS (Association of payment clearing services)	3055
135	GB, The Clearing House	3055
136	GS1 UK	3055
137	AT, Verband oesterreichischer Banken und Bankiers	3055
138	FR, CFONB (Comite francais d'organ. et de normalisation bancaires)	3055
139	Universal Postal Union (UPU)	3055
140	CEC (Commission of the European Communities), DG/XXI-01	3055
141	CEC (Commission of the European Communities), DG/XXI-B-1	3055
142	CEC (Commission of the European Communities), DG/XXXIV	3055
143	NZ, New Zealand Customs	3055
144	NL, Netherlands Customs	3055
145	SE, Swedish Customs	3055
146	DE, German Customs	3055
147	BE, Belgian Customs	3055
148	ES, Spanish Customs	3055
149	IL, Israel Customs	3055
150	HK, Hong Kong Customs	3055
151	JP, Japan Customs	3055
152	SA, Saudi Arabia Customs	3055
153	IT, Italian Customs	3055
154	GR, Greek Customs	3055
155	PT, Portuguese Customs	3055
156	LU, Luxembourg Customs	3055
157	NO, Norwegian Customs	3055
158	FI, Finnish Customs	3055

COPYRIGHT VDA 2026

Applicable codes

Code	Name/description	Code list
159	IS, Iceland Customs	3055
160	LI, Liechtenstein authority	3055
161	UNCTAD (United Nations - Conference on Trade And Development)	3055
162	CEC (Commission of the European Communities), DG/XIII-D-5	3055
163	US, FMC (Federal Maritime Commission)	3055
164	US, DEA (Drug Enforcement Agency)	3055
165	US, DCI (Distribution Codes, INC.)	3055
166	US, National Motor Freight Classification Association	3055
167	US, AIAG (Automotive Industry Action Group)	3055
168	US, FIPS (Federal Information Publishing Standard)	3055
169	CA, SCC (Standards Council of Canada)	3055
170	CA, CPA (Canadian Payment Association)	3055
171	NL, Interpay Girale Services	3055
172	NL, Interpay Debit Card Services	3055
173	NO, NORPRO	3055
174	DE, DIN (Deutsches Institut fuer Normung)	3055
175	FCI (Factors Chain International)	3055
176	BR, Banco Central do Brazil	3055
177	AU, LIFA (Life Insurance Federation of Australia)	3055
178	AU, SAA (Standards Association of Australia)	3055
179	US, Air transport association of America	3055
180	DE, BIA (Berufsgenossenschaftliches Institut fuer Arbeitssicherheit)	3055
181	Edibuild	3055
182	US, Standard Carrier Alpha Code (Motor)	3055
183	US, American Petroleum Institute	3055
184	AU, ACOS (Australian Chamber of Shipping)	3055
185	DE, BDI (Bundesverband der Deutschen Industrie e.V.)	3055
186	US, GSA (General Services Administration)	3055
187	US, DLMSO (Defense Logistics Management Standards Office)	3055
188	US, NIST (National Institute of Standards and Technology)	3055
189	US, DoD (Department of Defense)	3055
190	US, VA (Department of Veterans Affairs)	3055
191	IAPSO (United Nations Inter-Agency Procurement Services Office)	3055
192	Shipper's association	3055
193	EU, European Telecommunications Informatics Services (ETIS)	3055
194	AU, AQIS (Australian Quarantine and Inspection Service)	3055
195	CO, DIAN (Direccion de Impuestos y Aduanas Nacionales)	3055
196	US, COPAS (Council of Petroleum Accounting Society)	3055
197	US, DISA (Data Interchange Standards Association)	3055
198	CO, Superintendencia Bancaria De Colombia	3055
199	FR, Direction de la Comptabilite Publique	3055
200	GS1 Netherlands	3055
201	US, WSSA(Wine and Spirits Shippers Association)	3055
202	PT, Banco de Portugal	3055
203	FR, GALIA (Groupement pour l'Amelioration des Liaisons dans l'Industrie Automobile)	3055
204	DE, VDA (Verband der Automobilindustrie E.V.)	3055
205	IT, ODETTE Italy	3055
206	NL, ODETTE Netherlands	3055
207	ES, ODETTE Spain	3055
208	SE, ODETTE Sweden	3055
209	GB, ODETTE United Kingdom	3055
210	EU, EDI for financial, informational, cost, accounting, auditing and social areas (EDIFICAS) - Europe	3055
211	FR, EDI for financial, informational, cost, accounting, auditing and social areas (EDIFICAS) - France	3055

COPYRIGHT VDA 2026

Applicable codes

Code	Name/description	Code list
212	DE, Deutsch Telekom AG	3055
213	JP, NACCS Center (Nippon Automated Cargo Clearance System Operations Organization)	3055
214	US, AISI (American Iron and Steel Institute)	3055
215	AU, APCA (Australian Payments Clearing Association)	3055
216	US, Department of Labor	3055
217	US, N.A.I.C. (National Association of Insurance Commissioners)	3055
218	GB, The Association of British Insurers	3055
219	FR, d'ArvA	3055
220	FI, Finnish tax board	3055
221	FR, CNAMTS (Caisse Nationale de l'Assurance Maladie des Travailleurs Salaries)	3055
222	DK, Danish National Board of Health	3055
223	DK, Danish Ministry of Home Affairs	3055
224	US, Aluminum Association	3055
225	US, CIDX (Chemical Industry Data Exchange)	3055
226	US, Carbide Manufacturers	3055
227	US, NWDA (National Wholesale Druggist Association)	3055
228	US, EIA (Electronic Industry Association)	3055
229	US, American Paper Institute	3055
230	US, VICS (Voluntary Inter-Industry Commerce Standards)	3055
231	Copper and Brass Fabricators Council	3055
232	GB, Inland Revenue	3055
233	US, OMB (Office of Management and Budget)	3055
234	DE, Siemens AG	3055
235	AU, Tradegate (Electronic Commerce Australia)	3055
236	US, United States Postal Service (USPS)	3055
237	US, United States health industry	3055
238	US, TDCC (Transportation Data Coordinating Committee)	3055
239	US, HL7 (Health Level 7)	3055
240	US, CHIPS (Clearing House Interbank Payment Systems)	3055
241	PT, SIBS (Sociedade Interbancaria de Servicos)	3055
244	US, Department of Health and Human Services	3055
245	GS1 Denmark	3055
246	GS1 Germany	3055
247	US, HBICC (Health Industry Business Communication Council)	3055
248	US, ASTM (American Society of Testing and Materials)	3055
249	IP (Institute of Petroleum)	3055
250	US, UOP (Universal Oil Products)	3055
251	AU, HIC (Health Insurance Commission)	3055
252	AU, AIHW (Australian Institute of Health and Welfare)	3055
253	AU, NCCH (National Centre for Classification in Health)	3055
254	AU, DOH (Australian Department of Health)	3055
255	AU, ADA (Australian Dental Association)	3055
256	US, AAR (Association of American Railroads)	3055
257	ECCMA (Electronic Commerce Code Management Association)	3055
258	JP, Japanese Ministry of Transport	3055
259	JP, Japanese Maritime Safety Agency	3055
260	ebIX (European forum for energy Business Information eXchange)	3055
261	EEG7, European Expert Group 7 (Insurance)	3055
262	DE, GDV (Gesamtverband der Deutschen Versicherungswirtschaft e.V.)	3055
263	CA, CSIO (Centre for Study of Insurance Operations)	3055
264	FR, AGF (Assurances Generales de France)	3055
265	SE, Central bank	3055
266	US, DoA (Department of Agriculture)	3055
267	RU, Central Bank of Russia	3055

COPYRIGHT VDA 2026

Applicable codes

Code	Name/description	Code list
268	FR, DGI (Direction Generale des Impots)	3055
269	GRE (Reference Group of Experts)	3055
270	Concord EDI group	3055
271	InterContainer InterFrigo	3055
272	Joint Automotive Industry agency	3055
273	CH, SCC (Swiss Chambers of Commerce)	3055
274	ITIGG (International Transport Implementation Guidelines Group)	3055
275	ES, Banco de España	3055
276	Assigned by Port Community	3055
277	BIGNet (Business Information Group Network)	3055
278	Eurogate	3055
279	NL, Graydon	3055
280	FR, Euler	3055
281	GS1 Belgium and Luxembourg	3055
282	DE, Creditreform International e.V.	3055
283	DE, Hermes Kreditversicherungs AG	3055
284	TW, Taiwanese Bankers' Association	3055
285	ES, Asociación Española de Banca	3055
286	SE, TCO (Tjänstemännes Central Organisation)	3055
287	DE, FORTRAS (Forschungs- und Entwicklungsgesellschaft für Transportwesen GMBH)	3055
288	OSJD (Organizacija Sotrudnichestva Zeleznih Dorog)	3055
289	JP,JIPDEC/ECPC (Japan Information Processing Development Center / Electronic Commerce Promotion Center)	3055
290	JP, JAMA	3055
291	JP, JAPIA	3055
292	FI, TIEKE The Information Technology Development Centre of Finland	3055
293	DE, BDEW (Bundesverband der Energie- und Wasserwirtschaft e.V.)	3055
294	GS1 Austria	3055
295	AU, Australian Therapeutic Goods Administration	3055
296	ITU (International Telecommunication Union)	3055
297	IT, Ufficio IVA	3055
298	GS1 Spain	3055
299	BE, Seagha	3055
300	SE, Swedish International Freight Association	3055
301	DE, BauDatenbank GmbH	3055
302	DE, Bundesverband des Deutschen Textileinzelhandels e.V.	3055
303	GB, Trade Service Information Ltd (TSI)	3055
304	DE, Bundesverband Deutscher Heimwerker-, Bau- und Gartenfachmaerkte e.V.	3055
305	ETSO (European Transmission System Operator)	3055
306	SMDG (Ship-planning Message Design Group)	3055
307	JP, Ministry of Justice	3055
308	DE, FORTRAS (Forschungs- und Entwicklungsgesellschaft furTransportwesen mbH)	3055
309	JP, JASTPRO (Japan Association for Simplification of International Trade Procedures)	3055
310	DE, SAP AG (Systeme, Anwendungen und Produkte)	3055
311	JP, TDB (Teikoku Databank, Ltd.)	3055
312	FR, AGRO EDI EUROPE	3055
313	FR, Groupement National Interprofessionnel des Semences et Plants	3055
314	OAGi (Open Applications Group, Incorporated)	3055
315	US, STAR (Standards for Technology in Automotive Retail)	3055
316	GS1 Finland	3055
317	GS1 Brazil	3055
318	IETF (Internet Engineering Task Force)	3055
319	FR, GTF	3055
320	DK, Danish National IT and Telcom Agency (ITA)	3055
321	EASEE-Gas (European Association for the Streamlining of Energy Exchange for gas)	3055

COPYRIGHT VDA 2026

Applicable codes

Code	Name/description	Code list
322	IS, ICEPRO	3055
323	PROTECT	3055
324	GS1 Ireland	3055
325	GS1 Russia	3055
326	GS1 Poland	3055
327	GS1 Estonia	3055
328	Assigned by ultimate recipient of the message	3055
329	Assigned by loading dock operator	3055
330	Nordic Ediel Group	3055
331	US, Agricultural Marketing Service (AMS)	3055
332	DE, DVGW Service & Consult GmbH	3055
333	US, Animal and Plant Health Inspection Service (APHIS)	3055
334	US, Bureau of Labor Statistics (BLS)	3055
335	US, Bureau of Transportation Statistics (BTS)	3055
336	US, Customs and Border Protection (CBP)	3055
337	US, Center for Disease Control (CDC)	3055
338	US, Consumer Product Safety Commission (CPSC)	3055
339	US, Directorate of Defense Trade Controls (DDTC)	3055
340	US, Environmental Protection Agency (EPA)	3055
341	US, Federal Aviation Administration (FAA)	3055
342	US, Foreign Agriculture Service (FAS)	3055
343	US, Federal Motor Carrier Safety Administration (FMCSA)	3055
344	US, Food Safety Inspection Service (FSIS)	3055
345	US, Foreign Trade Zones Board (FTZB)	3055
346	US, The Grain Inspection, Packers and Stockyards Administration (GIPSA)	3055
347	US, Import Administration (IA)	3055
348	US, Internal Revenue Service (IRS)	3055
349	US, International Trade Commission (ITC)	3055
350	US, National Highway Traffic Safety Administration (NHTSA)	3055
351	US, National Marine Fisheries Service (NMFS)	3055
352	US, Office of Fossil Energy (OFE)	3055
353	US, Office of Foreign Missions (OFM)	3055
354	US, Bureau of Oceans and International Environmental and Scientific Affairs (OES)	3055
355	US, Office of Naval Intelligence (ONI)	3055
356	US, Pipeline and Hazardous Materials Safety Administration (PHMSA)	3055
357	US, Alcohol and Tobacco Tax and Trade Bureau (TTB)	3055
358	US, Army Corp of Engineers (USACE)	3055
359	US, Agency for International Development (USAID)	3055
360	US, Coast Guard (USCG)	3055
361	US, Office of the United States Trade Representative (USTR)	3055
362	International Commission for the Conservation of Atlantic Tunas (ICCAT)	3055
363	Inter-American Tropical Tuna Commission (IATTC)	3055
364	Commission for the Conservation of Southern Bluefin Tuna (CCSBT)	3055
365	Indian Ocean Tuna Commission (IOTC)	3055
366	International Botanical Congress	3055
367	International Commission on Zoological Nomenclature	3055
368	International Society for Horticulture Science	3055
369	Chemical Abstract Service (CAS)	3055
370	Social Security Administration (SSA)	3055
371	INMARSAT	3055
372	Agent of ship at the intended port of arrival	3055
373	US Air Force	3055
374	US, Bureau of Explosives	3055
375	Basel Convention Secretariat	3055
376	PANTONE	3055

COPYRIGHT VDA 2026

Applicable codes

Code	Name/description	Code list
377	IS, National Registry of Iceland	3055
378	IS, Internal Revenue Directorate of Iceland	3055
379	IANA (Internet Assigned Numbers Authority)	3055
380	Korea Customs Service	3055
381	Israel Tax Authority	3055
382	Israeli Ministry of Interior	3055
383	FR, LUMD (Logistique Urbaine Mutualisée Durable)	3055
384	DE, BiPRO (Brancheninitiative Prozessoptimierung)	3055
385	JO, Jordan Ministry of Agriculture	3055
386	JO, Jordan Customs	3055
387	JO, Jordan Food & Drug Administration	3055
388	JO, Jordan Institution for Standards and Metrology	3055
389	JO, Jordan Telecommunication Regulatory Commission	3055
390	JO, Jordan Nuclear Regulatory Commission	3055
391	JO, Jordan Ministry of Environment	3055
392	Hazardous waste collector	3055
393	Hazardous waste generator	3055
394	Marketing agent	3055
395	BE, TELEBIB Centre	3055
396	BE, BNB	3055
397	BE, FSMA	3055
398	FR, PHAST	3055
399	EXIS (Exis Technologies Ltd.)	3055
400	FAO (Food and Agriculture Organisation)	3055
401	CH, Spedlogswiss	3055
402	JP, National Tax Agency	3055
403	Comite Européen de Normalisation	3055
404	Assigned by logistics service provider	3055
405	Assigned by transport ministry	3055
406	AR, Customs Administration of Argentina	3055
407	BO, Customs Administration of Bolivia	3055
408	BR, Customs Administration of Brazil	3055
409	PY, Customs Administration of Paraguay	3055
410	UY, Customs Administration of Uruguay	3055
411	VE, Customs Administration of Venezuela	3055
412	IN, Customs Administration of India	3055
413	JP, JEC (UN/CEFACT Japan Committee)	3055
414	UAE, NAIC (National Advance Information Center)	3055
ZZZ	Mutually defined	3055

3139 Contact function code

Code	Name/description	Code list
EX	Expeditor	3139
IC	Information contact	3139

3155 Communication means type code

Code	Name/description	Code list
EM	Electronic mail	3155
FX	Telefax	3155
TE	Telephone	3155

3207 Country identifier

Code	Name/description	Code list
AD	ANDORRA	3207
AE	UNITED ARAB EMIRATES	3207
AF	AFGHANISTAN	3207

COPYRIGHT VDA 2026

Applicable codes

Code	Name/description	Code list
AG	ANTIGUA AND BARBUDA	3207
AI	ANGUILLA	3207
AL	ALBANIA	3207
AM	ARMENIA	3207
AN	NETHERLANDS ANTILLES	3207
AO	ANGOLA	3207
AQ	ANTARCTICA	3207
AR	ARGENTINA	3207
AS	AMERICAN SAMOA	3207
AT	AUSTRIA	3207
AU	AUSTRALIA	3207
AW	ARUBA	3207
AX	ÅLAND ISLANDS	3207
AZ	AZERBAIJAN	3207
BA	BOSNIA AND HERZEGOVINA	3207
BB	BARBADOS	3207
BD	BANGLADESH	3207
BE	BELGIUM	3207
BF	BURKINA FASO	3207
BG	BULGARIA	3207
BH	BAHRAIN	3207
BI	BURUNDI	3207
BJ	BENIN	3207
BL	SAINT BARTHÉLEMY	3207
BM	BERMUDA	3207
BN	BRUNEI DARUSSALAM	3207
BO	BOLIVIA (PLURINATIONAL STATE OF)	3207
BQ	BONAIRE, SINT EUSTATIUS AND SABA	3207
BR	BRAZIL	3207
BS	BAHAMAS	3207
BT	BHUTAN	3207
BV	BOUVET ISLAND	3207
BW	BOTSWANA	3207
BY	BELARUS	3207
BZ	BELIZE	3207
CA	CANADA	3207
CC	COCOS (KEELING) ISLANDS	3207
CD	CONGO, DEMOCRATIC REPUBLIC OF	3207
CF	CENTRAL AFRICAN REPUBLIC	3207
CG	CONGO	3207
CH	SWITZERLAND	3207
CI	COTE D'IVOIRE	3207
CK	COOK ISLANDS	3207
CL	CHILE	3207
CM	CAMEROON	3207
CN	CHINA	3207
CO	COLOMBIA	3207
CR	COSTA RICA	3207
CS	SERBIA AND MONTENEGRO	3207
CU	CUBA	3207
CV	CAPE VERDE	3207
CW	CURAÇAO	3207
CX	CHRISTMAS ISLAND	3207
CY	CYPRUS	3207
CZ	CZECHIA	3207

COPYRIGHT VDA 2026

Applicable codes

Code	Name/description	Code list
DE	GERMANY	3207
DJ	DJIBOUTI	3207
DK	DENMARK	3207
DM	DOMINICA	3207
DO	DOMINICAN REPUBLIC	3207
DZ	ALGERIA	3207
EC	ECUADOR	3207
EE	ESTONIA	3207
EG	EGYPT	3207
EH	WESTERN SAHARA	3207
ER	ERITREA	3207
ES	SPAIN	3207
ET	ETHIOPIA	3207
FI	FINLAND	3207
FJ	FIJI	3207
FK	FALKLAND ISLANDS (MALVINAS)	3207
FM	MICRONESIA (FEDERATED STATES OF)	3207
FO	FAROE ISLANDS	3207
FR	FRANCE	3207
GA	GABON	3207
GB	UNITED KINGDOM OF GREAT BRITAIN AND NORTHERN IRELAND	3207
GD	GRENADA	3207
GE	GEORGIA	3207
GF	FRENCH GUIANA	3207
GG	GUERNSEY	3207
GH	GHANA	3207
GI	GIBRALTAR	3207
GL	GREENLAND	3207
GM	GAMBIA	3207
GN	GUINEA	3207
GP	GUADELOUPE	3207
GQ	EQUATORIAL GUINEA	3207
GR	GREECE	3207
GS	SOUTH GEORGIA AND THE SOUTH SANDWICH ISLANDS	3207
GT	GUATEMALA	3207
GU	GUAM	3207
GW	GUINEA-BISSAU	3207
GY	GUYANA	3207
HK	HONG KONG	3207
HM	HEARD ISLAND AND MCDONALD ISLANDS	3207
HN	HONDURAS	3207
HR	CROATIA	3207
HT	HAITI	3207
HU	HUNGARY	3207
ID	INDONESIA	3207
IE	IRELAND	3207
IL	ISRAEL	3207
IM	ISLE OF MAN	3207
IN	INDIA	3207
IO	BRITISH INDIAN OCEAN TERRITORY	3207
IQ	IRAQ	3207
IR	IRAN (ISLAMIC REPUBLIC OF)	3207
IS	ICELAND	3207
IT	ITALY	3207
JE	JERSEY	3207

COPYRIGHT VDA 2026

Applicable codes

Code	Name/description	Code list
JM	JAMAICA	3207
JO	JORDAN	3207
JP	JAPAN	3207
KE	KENYA	3207
KG	KYRGYZSTAN	3207
KH	CAMBODIA	3207
KI	KIRIBATI	3207
KM	COMOROS	3207
KN	SAINT KITTS AND NEVIS	3207
KP	KOREA (DEMOCRATIC PEOPLE'S REPUBLIC OF)	3207
KR	KOREA, REPUBLIC OF	3207
KW	KUWAIT	3207
KY	CAYMAN ISLANDS	3207
KZ	KAZAKHSTAN	3207
LA	LAO PEOPLE'S DEMOCRATIC REPUBLIC	3207
LB	LEBANON	3207
LC	SAINT LUCIA	3207
LI	LIECHTENSTEIN	3207
LK	SRI LANKA	3207
LR	LIBERIA	3207
LS	LESOTHO	3207
LT	LITHUANIA	3207
LU	LUXEMBOURG	3207
LV	LATVIA	3207
LY	LIBYA	3207
MA	MOROCCO	3207
MC	MONACO	3207
MD	MOLDOVA, REPUBLIC OF	3207
ME	MONTENEGRO	3207
MF	SAINT MARTIN (FRENCH PART)	3207
MG	MADAGASCAR	3207
MH	MARSHALL ISLANDS	3207
MK	MACEDONIA, THE FORMER YUGOSLAV REPUBLIC OF	3207
ML	MALI	3207
MM	MYANMAR	3207
MN	MONGOLIA	3207
MO	MACAO	3207
MP	NORTHERN MARIANA ISLANDS	3207
MQ	MARTINIQUE	3207
MR	MAURITANIA	3207
MS	MONTSERRAT	3207
MT	MALTA	3207
MU	MAURITIUS	3207
MV	MALDIVES	3207
MW	MALAWI	3207
MX	MEXICO	3207
MY	MALAYSIA	3207
MZ	MOZAMBIQUE	3207
NA	NAMIBIA	3207
NC	NEW CALEDONIA	3207
NE	NIGER	3207
NF	NORFOLK ISLAND	3207
NG	NIGERIA	3207
NI	NICARAGUA	3207
NL	NETHERLANDS	3207

COPYRIGHT VDA 2026

Applicable codes

Code	Name/description	Code list
NO	NORWAY	3207
NP	NEPAL	3207
NR	NAURU	3207
NU	NIUE	3207
NZ	NEW ZEALAND	3207
OM	OMAN	3207
PA	PANAMA	3207
PE	PERU	3207
PF	FRENCH POLYNESIA	3207
PG	PAPUA NEW GUINEA	3207
PH	PHILIPPINES	3207
PK	PAKISTAN	3207
PL	POLAND	3207
PM	SAINT PIERRE AND MIQUELON	3207
PN	PITCAIRN	3207
PR	PUERTO RICO	3207
PS	PALESTINE, STATE OF	3207
PT	PORTUGAL	3207
PW	PALAU	3207
PY	PARAGUAY	3207
QA	QATAR	3207
RE	REUNION	3207
RO	ROMANIA	3207
RS	SERBIA	3207
RU	RUSSIAN FEDERATION	3207
RW	RWANDA	3207
SA	SAUDI ARABIA	3207
SB	SOLOMON ISLANDS	3207
SC	SEYCHELLES	3207
SD	SUDAN	3207
SE	SWEDEN	3207
SG	SINGAPORE	3207
SH	SAINT HELENA, ASCENSION AND TRISTAN DA CUNHA	3207
SI	SLOVENIA	3207
SJ	SVALBARD AND JAN MAYEN	3207
SK	SLOVAKIA	3207
SL	SIERRA LEONE	3207
SM	SAN MARINO	3207
SN	SENEGAL	3207
SO	SOMALIA	3207
SR	SURINAME	3207
SS	SOUTH SUDAN	3207
ST	SAO TOME AND PRINCIPE	3207
SV	EL SALVADOR	3207
SX	SINT MAARTEN (DUTCH PART)	3207
SY	SYRIAN ARAB REPUBLIC	3207
SZ	SWAZILAND	3207
TC	TURKS AND CAICOS ISLANDS	3207
TD	CHAD	3207
TF	FRENCH SOUTHERN TERRITORIES	3207
TG	TOGO	3207
TH	THAILAND	3207
TJ	TAJIKISTAN	3207
TK	TOKELAU	3207
TL	TIMOR-LESTE	3207

COPYRIGHT VDA 2026

Applicable codes

Code	Name/description	Code list
TM	TURKMENISTAN	3207
TN	TUNISIA	3207
TO	TONGA	3207
TR	TURKEY	3207
TT	TRINIDAD AND TOBAGO	3207
TV	TUVALU	3207
TW	TAIWAN, PROVINCE OF CHINA	3207
TZ	TANZANIA, UNITED REPUBLIC OF	3207
UA	UKRAINE	3207
UG	UGANDA	3207
UM	UNITED STATES MINOR OUTLYING ISLANDS	3207
US	UNITED STATES OF AMERICA	3207
UY	URUGUAY	3207
UZ	UZBEKISTAN	3207
VA	HOLY SEE	3207
VC	SAINT VINCENT AND THE GRENADINES	3207
VE	VENEZUELA (BOLIVARIAN REPUBLIC OF)	3207
VG	VIRGIN ISLANDS, BRITISH	3207
VI	VIRGIN ISLANDS, U.S.	3207
VN	VIET NAM	3207
VU	VANUATU	3207
WF	WALLIS AND FUTUNA	3207
WS	SAMOA	3207
YE	YEMEN	3207
YT	MAYOTTE	3207
YU	YUGOSLAVIA	3207
ZA	SOUTH AFRICA	3207
ZM	ZAMBIA	3207
ZW	ZIMBABWE	3207
3227	Location function code qualifier	
Code	Name/description	Code list
7	Place of delivery	3227
9	Place of loading	3227
11	Place of discharge	3227
13	Place of transhipment	3227
4055	Delivery or transport terms function code	
Code	Name/description	Code list
2	Despatch condition	4055
4233	Marking instructions code	
Code	Name/description	Code list
3	Mark customers references	4233
16	Buyer's instructions	4233
17	Seller's instructions	4233
4441	Free text description code	
Code	Name/description	Code list
003	Carrier arrives with empty packages	4441(1)
4451	Text subject code qualifier	
Code	Name/description	Code list
TRA	Transportation information	4451
6311	Measurement purpose code qualifier	

COPYRIGHT VDA 2026

Applicable codes

Code	Name/description	Code list
AAE	Measurement	6311
AAX	Consignment measurement	6311
AAZ	Handling unit measurement	6311
ABR	Certified weight	6311
ABU	Quota	6311
LMT	Loading meters	6311
PD	Physical dimensions (product ordered)	6311

6313 Measured attribute code

Code	Name/description	Code list
AAB	Goods item gross weight	6313
AAD	Consignment gross weight	6313
AAL	Net weight	6313
AAX	Net volume	6313
ABJ	Volume	6313
AFE	Maximum stacking weight	6313
HT	Height dimension	6313
LN	Length	6313
WD	Width dimension	6313

6411 Measurement unit code

Code	Name/description	Code list
C62	one	6411
CMT	centimetre	6411
DMQ	cubic decimetre	6411
DMT	decimetre	6411
KGM	kilogram	6411
LTR	litre	6411
MMT	millimetre	6411
MTQ	cubic metre	6411
MTR	metre	6411
PCE	piece	6411

7041 Power type code

Code	Name/description	Code list
1	Diesel	7041
2	Diesel and electric	7041
3	Electric	7041
4	Liquid Propane Gas	7041
5	Petrol	7041
6	Petrol and electric	7041
7	Hydrogen	7041
8	Compressed Natural Gas	7041
9	Liquified Natural Gas	7041

7064 Type of packages

Code	Name/description	Code list
080607	VDA GLT 800 x 600 x 700	7064
121010	VDA GLT 1200 x 1000 x 975	7064
0000BEH	sonst. Flüssigkeitsbehälter, Gebinde, Kanister, Hobbock, Tank, Container, nicht näher spezifiziert	7064
0000BLE	Sheet metal packaging, sheet metal coils, not specified	7064
0000BUN	Bunches, not specified	7064
0000FAS	Barrel, not specified	7064
0000LOS	Loose material (unpacked)	7064
0000PAL	120 x 80 cm, palette until 15 cm high	7064

COPYRIGHT VDA 2026

Applicable codes

Code	Name/description	Code list
0000SAC	Bag, not specified	7064
0000SCH	Box, case, package, not specified	7064
0000SON	Additional packages, not specified	7064
0000UMR	Hoop, tightening strap, not specified	7064
0001PAL	120 x 80 cm, until 50 cm high	7064
0001SCH	Box, case, package: Dimension until 30 x 20 x 14 cm	7064
0001SON	Additional packages > 1 cbm, not specified	7064
0002PAL	120 x 80 cm, palette until 100 cm high	7064
0002SCH	Box, case, package: Dimension until 30 x 20 x 28 cm	7064
0002SON	Additional packages < 1 cbm, not specified	7064
0003PAL	120 x 80 cm, palette until 150 cm high	7064
0003SCH	Box, case, package: Dimension until 40 x 30 x 14 cm	7064
0004PAL	120 x 80 cm, palette until 200 cm high	7064
0004SCH	Box, case, package: Dimension until 40 x 20 x 28 cm	7064
0005PAL	120 x 100 cm, palette until 50 cm high	7064
0005SCH	Box, case, package: Dimension until 50 x 30 x 20 cm	7064
0006PAL	120 x 100 cm, palette until 100 cm high	7064
0006SCH	Box, case, package: Dimension until 50 x 50 x 50 cm	7064
0007PAL	120 x 100 cm, paette until 150 cm high	7064
0007SCH	Box, case, package: Dimension until 58 x 48 x 36 cm	7064
0008PAL	120 x 100 cm, palette until 200 cm high	7064
0008SCH	Box, case, package: Dimension until 60 x 40 x 14 cm	7064
0009PAL	Palette: 120 x 100 cm, Flachpalette bis 15 cm Höhe	7064
0009SCH	Box, case, package: Dimension until 60 x 40 x 28 cm	7064
0010PAL	Palette 160 x 120 x 15 cm	7064
0010SCH	Box, case, package: Dimension until 80 x 60 x 40 cm	7064
0011SCH	Box, case, package: Dimension until 98 x 58 x 36 cm	7064
0012SCH	Box, case, package: Dimension until 100 x 60 x 73 cm	7064
0013SCH	Box, case, package: Dimension until 120 x 78 x 110 cm	7064
0014SCH	Box, case, package: Dimension until 120 x 80 x 40 cm	7064
0015SCH	Box, case, package: Dimension until 120 x 80 x 90 cm	7064
0016SCH	Box, case, package: Dimension until 120 x 100 x 90 cm	7064
0017SCH	Schachtel, Kiste, Paket: Abmessung bis 160 x 120 x 90 cm	7064
12081A	VDA KLT Ladeeinheit Abschlussdeckel 1200 x 800 x 84	7064
12081AE	VDA KLT Ladeeinheit Abschlussdeckel 1200 x 800 x 84	7064
1208A	VDA KLT Ladeeinheit Abschlussdeckel 1200 x 800 x 94	7064
1208SP	VDA KLT Sicherungsplatte für Palette 1200 x 800	7064
1210A	VDA KLT Ladeeinheit Abschlussdeckel 1200 x 1000 x 94	7064
1210AE	VDA KLT Ladeeinheit Abschlussdeckel 1200 x 1000 x 94	7064
13L	EWPS Zwischenlage 13 Zoll beschichtet	7064
13S	EWPS Zwischenlage 13 Zoll unbeschichtet	7064
14L	EWPS Zwischenlage 14 Zoll beschichtet	7064
14S	EWPS Zwischenlage 14 Zoll unbeschichtet	7064
15L	EWPS Zwischenlage 15 Zoll beschichtet	7064
15S	EWPS Zwischenlage 15 Zoll unbeschichtet	7064
16L	EWPS Zwischenlage 16 Zoll beschichtet	7064
16S	EWPS Zwischenlage 16 Zoll unbeschichtet	7064
175S	EWPS Zwischenlage 17.5 Zoll unbeschichtet	7064
175SDC	EWPS Zwischenlage 17.5 Zoll unbeschichtet Steilschulter	7064
17L	EWPS Zwischenlage 17 Zoll beschichtet	7064
17S	EWPS Zwischenlage 17 Zoll unbeschichtet	7064
18L	EWPS Zwischenlage 18 Zoll beschichtet	7064
18S	EWPS Zwischenlage 18 Zoll unbeschichtet	7064
195SDC	EWPS Zwischenlage 19.5 Zoll unbeschichtet Steilschulter	7064
19L	EWPS Zwischenlage 19 Zoll beschichtet	7064

COPYRIGHT VDA 2026

Applicable codes

Code	Name/description	Code list
19S	EWPS Zwischenlage 19 Zoll unbeschichtet	7064
1BP	EWPS Grundpalette Größe 1	7064
1TP	EWPS Abschlussrahmen Größe 1	7064
20L	EWPS Zwischenlage 20 Zoll beschichtet	7064
20S	EWPS Zwischenlage 20 Zoll unbeschichtet	7064
20STBS	EWPS Zwischenlage 20 Zoll unbeschichtet Schrägschulter	7064
21L	EWPS Zwischenlage 21 Zoll beschichtet	7064
21S	EWPS Zwischenlage 21 Zoll unbeschichtet	7064
225SDC	EWPS Zwischenlage 22.5 Zoll unbeschichtet Steilschulter	7064
22L	EWPS Zwischenlage 22 Zoll beschichtet	7064
22S	EWPS Zwischenlage 22 Zoll unbeschichtet	7064
2BP	EWPS Grundpalette Größe 2	7064
2TP	EWPS Abschlussrahmen Größe 2	7064
3115RE	VDA R KLT ESD300 x 200 x 147	7064
3115RLE	VDA RL KLT ESD 300 x 200 x 147	7064
3147RL	VDA RL KLT 300 x 200 x 147	7064
31DE	VDA KLT Deckel ESD 300 x 200	7064
3214C	VDA C KLT 300 x 200 x 147	7064
3215R	VDA R KLT 300 x 200 x 147	7064
3217C	VDA C KLT 300 x 200 x 174	7064
35D	VDA KLT Deckel 300 x 200	7064
3715RF	VDA R KLT 300 x 200 x 147 mit RFID (Retrofit)	7064
3747RLF	VDA RL KLT 300 x 200 x147 mit RFID (Retrofit)	7064
3BP	EWPS Grundpalette Größe 3	7064
3TP	EWPS Abschlussrahmen Größe 3	7064
4047RLE	VDA RL KLT ESD 400 x 300 x 147	7064
4080RLE	VDA RL KLT ESD 400 x 300 x 280	7064
4115RE	VDA R KLT ESD 400 x 300 x 147	7064
4129RE	VDA R KLT ESD 400 x 300 x 280	7064
4147RL	VDA RL KLT 400 x 300 x 147	7064
41DE	VDA KLT Deckel ESD 400 x 300	7064
4280RL	VDA RL KLT 400 x 300 x 280	7064
4314C	VDA C KLT 400 x 300 x 147	7064
4315R	VDA R KLT 400 x 300 x 147	7064
4317C	VDA C KLT 400 x 300 x 174	7064
4321C	VDA C KLT 400 x 300 x 214	7064
4328C	VDA C KLT 400 x 300 x 280	7064
4329R	VDA R KLT 400 x 300 x 280	7064
45D	VDA KLT Deckel 400 x 300	7064
4713RLF	VDA RL KLT 400 x 300 x 213 mit RFID (Retrofit)	7064
4715RF	VDA R KLT 400 x 300 x 147 mit RFID (Retrofit)	7064
4722RF	VDA R KLT 400 x 300 x 213 mit RFID (Retrofit)	7064
4729RF	VDA R KLT 400 x 300 x 280 mit RFID (Retrofit)	7064
4747RLF	VDA RL KLT 400 x 300 x 147 mit RFID (Retrofit)	7064
4780RLF	VDA RL KLT 400 x 300 x 280 mit RFID (Retrofit)	7064
4BP	EWPS Grundpalette Größe 4	7064
4TP	EWPS Abschlussrahmen Größe 4	7064
6047RLE	VDA RL KLT ESD 600 x 400 x 147	7064
6080RLE	VDA RL KLT ESD 600 x 400 x 280	7064
6115RE	VDA R KLT ESD 600 x 400 x 147	7064
6129RE	VDA R KLT ESD 600 x 400 x 280	7064
6147RL	VDA RL KLT 600 x 400 x 147	7064
61DE	VDA KLT Deckel ESD 600 x 400	7064
6280RL	VDA RL KLT 600 x 400 x 280	7064
6410F	VDA F KLT 600 x 400 x 280 (94.5)	7064

COPYRIGHT VDA 2026

Applicable codes

Code	Name/description	Code list
6414C	VDA C KLT 600 x 400 x 147	7064
6415R	VDA R KLT 600 x 400 x 147	7064
6417C	VDA C KLT 600 x 400 x 174	7064
6421C	VDA C KLT 600 x 400 x 214	7064
6428C	VDA C KLT 600 x 400 x 280	7064
6429R	VDA R KLT 600 x 400 x 280	7064
65D	VDA KLT Deckel 600 x 400	7064
6713RLF	VDA RL KLT 600 x 400 x 213 mit RFID (Retrofit)	7064
6715RF	VDA R KLT 600 x 400 x 147 mit RFID (Retrofit)	7064
6722RF	VDA R KLT 600 x 400 x 213 mit RFID (Retrofit)	7064
6729RF	VDA R KLT 600 x 400 x 280 with RFID (Retrofit)	7064
6747RLF	VDA RL KLT 600 x 400 x 147 mit RFID (Retrofit)	7064
6780RLF	VDA RL KLT 600 x 400 x 280 mit RFID (Retrofit)	7064
COPACK	Virtuelle Verpackung	7064
UNPACKD	unverpackte Ware (lose oder Schüttgut)	7064

7065 Package type description code

Code	Name/description	Code list
43	Bag, super bulk	7065
44	Bag, polybag	7065
1A	Drum, steel	7065
1B	Drum, aluminium	7065
1D	Drum, plywood	7065
1F	Container, flexible	7065
1G	Drum, fibre	7065
1W	Drum, wooden	7065
2C	Barrel, wooden	7065
3A	Jerrican, steel	7065
3H	Jerrican, plastic	7065
4A	Box, steel	7065
4B	Box, aluminium	7065
4C	Box, natural wood	7065
4D	Box, plywood	7065
4F	Box, reconstituted wood	7065
4G	Box, fibreboard	7065
4H	Box, plastic	7065
5H	Bag, woven plastic	7065
5L	Bag, textile	7065
5M	Bag, paper	7065
6H	Composite packaging, plastic receptacle	7065
6P	Composite packaging, glass receptacle	7065
7A	Case, car	7065
7B	Case, wooden	7065
8A	Pallet, wooden	7065
8B	Crate, wooden	7065
8C	Bundle, wooden	7065
AA	Intermediate bulk container, rigid plastic	7065
AB	Receptacle, fibre	7065
AC	Receptacle, paper	7065
AD	Receptacle, wooden	7065
AE	Aerosol	7065
AF	Pallet, modular, collars 80cms × 60cms	7065
AG	Pallet, shrinkwrapped	7065
AH	Pallet, 100cms × 110cms	7065
AI	Clamshell	7065

COPYRIGHT VDA 2026

Applicable codes

Code	Name/description	Code list
AJ	Cone	7065
AL	Ball	7065
AM	Ampoule, non-protected	7065
AP	Ampoule, protected	7065
AT	Atomizer	7065
AV	Capsule	7065
B4	Belt	7065
BA	Barrel	7065
BB	Bobbin	7065
BC	Bottlecrate / bottlerack	7065
BD	Board	7065
BE	Bundle	7065
BF	Balloon, non-protected	7065
BG	Bag	7065
BH	Bunch	7065
BI	Bin	7065
BJ	Bucket	7065
BK	Basket	7065
BL	Bale, compressed	7065
BM	Basin	7065
BN	Bale, non-compressed	7065
BO	Bottle, non-protected, cylindrical	7065
BP	Balloon, protected	7065
BQ	Bottle, protected cylindrical	7065
BR	Bar	7065
BS	Bottle, non-protected, bulbous	7065
BT	Bolt	7065
BU	Butt	7065
BV	Bottle, protected bulbous	7065
BW	Box, for liquids	7065
BX	Box	7065
BY	Board, in bundle/bunch/truss	7065
BZ	Bars, in bundle/bunch/truss	7065
CA	Can, rectangular	7065
CB	Crate, beer	7065
CC	Churn	7065
CD	Can, with handle and spout	7065
CE	Creel	7065
CF	Coffer	7065
CG	Cage	7065
CH	Chest	7065
CI	Canister	7065
CJ	Coffin	7065
CK	Cask	7065
CL	Coil	7065
CM	Card	7065
CN	Container, not otherwise specified as transport equipment	7065
CO	Carboy, non-protected	7065
CP	Carboy, protected	7065
CQ	Cartridge	7065
CR	Crate	7065
CS	Case	7065
CT	Carton	7065
CU	Cup	7065
CV	Cover	7065

COPYRIGHT VDA 2026

Applicable codes

Code	Name/description	Code list
CW	Cage, roll	7065
CX	Can, cylindrical	7065
CY	Cylinder	7065
CZ	Canvas	7065
DA	Crate, multiple layer, plastic	7065
DB	Crate, multiple layer, wooden	7065
DC	Crate, multiple layer, cardboard	7065
DG	Cage, Commonwealth Handling Equipment Pool (CHEP)	7065
DH	Box, Commonwealth Handling Equipment Pool (CHEP), Eurobox	7065
DI	Drum, iron	7065
DJ	Demijohn, non-protected	7065
DK	Crate, bulk, cardboard	7065
DL	Crate, bulk, plastic	7065
DM	Crate, bulk, wooden	7065
DN	Dispenser	7065
DP	Demijohn, protected	7065
DR	Drum	7065
DS	Tray, one layer no cover, plastic	7065
DT	Tray, one layer no cover, wooden	7065
DU	Tray, one layer no cover, polystyrene	7065
DV	Tray, one layer no cover, cardboard	7065
DW	Tray, two layers no cover, plastic tray	7065
DX	Tray, two layers no cover, wooden	7065
DY	Tray, two layers no cover, cardboard	7065
EC	Bag, plastic	7065
ED	Case, with pallet base	7065
EE	Case, with pallet base, wooden	7065
EF	Case, with pallet base, cardboard	7065
EG	Case, with pallet base, plastic	7065
EH	Case, with pallet base, metal	7065
EI	Case, isothermic	7065
EN	Envelope	7065
FB	Flexibag	7065
FC	Crate, fruit	7065
FD	Crate, framed	7065
FE	Flexitank	7065
FI	Firkin	7065
FL	Flask	7065
FO	Footlocker	7065
FP	Filmpack	7065
FR	Frame	7065
FT	Foodtainer	7065
FW	Cart, flatbed	7065
FX	Bag, flexible container	7065
GB	Bottle, gas	7065
GI	Girder	7065
GL	Container, gallon	7065
GR	Receptacle, glass	7065
GU	Tray, containing horizontally stacked flat items	7065
GY	Bag, gunny	7065
GZ	Girders, in bundle/bunch/truss	7065
HA	Basket, with handle, plastic	7065
HB	Basket, with handle, wooden	7065
HC	Basket, with handle, cardboard	7065
HG	Hogshead	7065

COPYRIGHT VDA 2026

Applicable codes

Code	Name/description	Code list
HN	Hanger	7065
HR	Hamper	7065
IA	Package, display, wooden	7065
IB	Package, display, cardboard	7065
IC	Package, display, plastic	7065
ID	Package, display, metal	7065
IE	Package, show	7065
IF	Package, flow	7065
IG	Package, paper wrapped	7065
IH	Drum, plastic	7065
IK	Package, cardboard, with bottle grip-holes	7065
IL	Tray, rigid, lidded stackable (CEN TS 14482:2002)	7065
IN	Ingot	7065
IZ	Ingots, in bundle/bunch/truss	7065
JB	Bag, jumbo	7065
JC	Jerrican, rectangular	7065
JG	Jug	7065
JR	Jar	7065
JT	Jutebag	7065
JY	Jerrican, cylindrical	7065
KG	Keg	7065
KI	Kit	7065
LE	Luggage	7065
LG	Log	7065
LT	Lot	7065
LU	Lug	7065
LV	Liftvan	7065
LZ	Logs, in bundle/bunch/truss	7065
MA	Crate, metal	7065
MB	Bag, multiply	7065
MC	Crate, milk	7065
ME	Container, metal	7065
MR	Receptacle, metal	7065
MS	Sack, multi-wall	7065
MT	Mat	7065
MW	Receptacle, plastic wrapped	7065
MX	Matchbox	7065
NA	Not available	7065
NE	Unpacked or unpackaged	7065
NF	Unpacked or unpackaged, single unit	7065
NG	Unpacked or unpackaged, multiple units	7065
NS	Nest	7065
NT	Net	7065
NU	Net, tube, plastic	7065
NV	Net, tube, textile	7065
O1	Two sided cage on wheels with fixing strap	7065
O2	Trolley	7065
O3	Oneway pallet ISO 0 - 1/2 EURO Pallet	7065
O4	Oneway pallet ISO 1 - 1/1 EURO Pallet	7065
O5	Oneway pallet ISO 2 - 2/1 EURO Pallet	7065
O6	Pallet with exceptional dimensions	7065
O7	Wooden pallet 40 cm x 80 cm	7065
O8	Plastic pallet SRS 60 cm x 80 cm	7065
O9	Plastic pallet SRS 80 cm x 120 cm	7065
OA	Pallet, CHEP 40 cm x 60 cm	7065

COPYRIGHT VDA 2026

Applicable codes

Code	Name/description	Code list
OB	Pallet, CHEP 80 cm x 120 cm	7065
OC	Pallet, CHEP 100 cm x 120 cm	7065
OD	Pallet, AS 4068-1993	7065
OE	Pallet, ISO T11	7065
OF	Platform, unspecified weight or dimension	7065
OG	Pallet ISO 0 - 1/2 EURO Pallet	7065
OH	Pallet ISO 1 - 1/1 EURO Pallet	7065
OI	Pallet ISO 2 - 2/1 EURO Pallet	7065
OJ	1/4 EURO Pallet	7065
OK	Block	7065
OL	1/8 EURO Pallet	7065
OM	Synthetic pallet ISO 1	7065
ON	Synthetic pallet ISO 2	7065
OP	Wholesaler pallet	7065
OQ	Pallet 80 X 100 cm	7065
OR	Pallet 60 X 100 cm	7065
OS	Oneway pallet	7065
OT	Octabin	7065
OU	Container, outer	7065
OV	Returnable pallet	7065
OW	Large bag, pallet sized	7065
OX	A wheeled pallet with raised rim (81 x 67 x 135)	7065
OY	A wheeled pallet with raised rim (81 x 72 x 135)	7065
OZ	A wheeled pallet with raised rim (81 x 60 x 16)	7065
P1	CHEP pallet 60 cm x 80 cm	7065
P2	Pan	7065
P3	LPR pallet 60 cm x 80 cm	7065
P4	LPR pallet 80 cm x 120 cm	7065
PA	Packet	7065
PB	Pallet, box	7065
PC	Parcel	7065
PD	Pallet, modular, collars 80cms * 100cms	7065
PE	Pallet, modular, collars 80cms * 120cms	7065
PF	Pen	7065
PG	Plate	7065
PH	Pitcher	7065
PI	Pipe	7065
PJ	Punnet	7065
PK	Package	7065
PL	Pail	7065
PN	Plank	7065
PO	Pouch	7065
PP	Piece	7065
PR	Receptacle, plastic	7065
PT	Pot	7065
PU	Tray pack	7065
PV	Pipes, in bundle/bunch/truss	7065
PX	Pallet	7065
PY	Plates, in bundle/bunch/truss	7065
PZ	Planks, in bundle/bunch/truss	7065
QA	Drum, steel, non-removable head	7065
QB	Drum, steel, removable head	7065
QC	Drum, aluminium, non-removable head	7065
QD	Drum, aluminium, removable head	7065
QF	Drum, plastic, non-removable head	7065

COPYRIGHT VDA 2026

Applicable codes

Code	Name/description	Code list
QG	Drum, plastic, removable head	7065
QH	Barrel, wooden, bung type	7065
QJ	Barrel, wooden, removable head	7065
QK	Jerrican, steel, non-removable head	7065
QL	Jerrican, steel, removable head	7065
QM	Jerrican, plastic, non-removable head	7065
QN	Jerrican, plastic, removable head	7065
QP	Box, wooden, natural wood, ordinary	7065
QQ	Box, wooden, natural wood, with sift proof walls	7065
QR	Box, plastic, expanded	7065
QS	Box, plastic, solid	7065
RD	Rod	7065
RG	Ring	7065
RJ	Rack, clothing hanger	7065
RK	Rack	7065
RL	Reel	7065
RO	Roll	7065
RT	Rednet	7065
RZ	Rods, in bundle/bunch/truss	7065
SA	Sack	7065
SB	Slab	7065
SC	Crate, shallow	7065
SD	Spindle	7065
SE	Sea-chest	7065
SH	Sachet	7065
SI	Skid	7065
SK	Case, skeleton	7065
SL	Slipsheet	7065
SM	Sheetmetal	7065
SO	Spool	7065
SP	Sheet, plastic wrapping	7065
SS	Case, steel	7065
ST	Sheet	7065
SU	Suitcase	7065
SV	Envelope, steel	7065
SW	Shrinkwrapped	7065
SX	Set	7065
SY	Sleeve	7065
SZ	Sheets, in bundle/bunch/truss	7065
T1	Tablet	7065
TB	Tub	7065
TC	Tea-chest	7065
TD	Tube, collapsible	7065
TE	Tyre	7065
TG	Tank container, generic	7065
TI	Tierce TI	7065
TK	Tank, rectangular	7065
TL	Tub, with lid	7065
TN	Tin	7065
TO	Tun	7065
TR	Trunk	7065
TS	Truss	7065
TT	Bag, tote	7065
TU	Tube	7065
TV	Tube, with nozzle	7065

COPYRIGHT VDA 2026

Applicable codes

Code	Name/description	Code list
TW	Pallet, triwall	7065
TY	Tank, cylindrical	7065
TZ	Tubes, in bundle/bunch/truss	7065
UC	Uncaged	7065
UN	Unit	7065
VA	Vat	7065
VG	Bulk, gas (at 1031 mbar and 15 degree C)	7065
VI	Vial	7065
VK	Vanpack	7065
VL	Bulk, liquid	7065
VN	Vehicle	7065
VO	Bulk, solid, large particles ("nodules")	7065
VP	Vacuum-packed	7065
VQ	Bulk, liquefied gas (at abnormal temperature/pressure)	7065
VR	Bulk, solid, granular particles ("grains")	7065
VS	Bulk, scrap metal	7065
VY	Bulk, solid, fine particles ("powders")	7065
WA	Intermediate bulk container	7065
WB	Wickerbottle	7065
WC	Intermediate bulk container, steel	7065
WD	Intermediate bulk container, aluminium	7065
WF	Intermediate bulk container, metal	7065
WG	Intermediate bulk container, steel, pressurised > 10 kpa	7065
WH	Intermediate bulk container, aluminium, pressurised > 10 kpa	7065
WJ	Intermediate bulk container, metal, pressure 10 kpa	7065
WK	Intermediate bulk container, steel, liquid	7065
WL	Intermediate bulk container, aluminium, liquid	7065
WM	Intermediate bulk container, metal, liquid	7065
WN	Intermediate bulk container, woven plastic, without coat/liner	7065
WP	Intermediate bulk container, woven plastic, coated	7065
WQ	Intermediate bulk container, woven plastic, with liner	7065
WR	Intermediate bulk container, woven plastic, coated and liner	7065
WS	Intermediate bulk container, plastic film	7065
WT	Intermediate bulk container, textile with out coat/liner	7065
WU	Intermediate bulk container, natural wood, with inner liner	7065
WV	Intermediate bulk container, textile, coated	7065
WW	Intermediate bulk container, textile, with liner	7065
WX	Intermediate bulk container, textile, coated and liner	7065
WY	Intermediate bulk container, plywood, with inner liner	7065
WZ	Intermediate bulk container, reconstituted wood, with inner liner	7065
XA	Bag, woven plastic, without inner coat/liner	7065
XB	Bag, woven plastic, sift proof	7065
XC	Bag, woven plastic, water resistant	7065
XD	Bag, plastics film	7065
XF	Bag, textile, without inner coat/liner	7065
XG	Bag, textile, sift proof	7065
XH	Bag, textile, water resistant	7065
XJ	Bag, paper, multi-wall	7065
XK	Bag, paper, multi-wall, water resistant	7065
YA	Composite packaging, plastic receptacle in steel drum	7065
YB	Composite packaging, plastic receptacle in steel crate box	7065
YC	Composite packaging, plastic receptacle in aluminium drum	7065
YD	Composite packaging, plastic receptacle in aluminium crate	7065
YF	Composite packaging, plastic receptacle in wooden box	7065
YG	Composite packaging, plastic receptacle in plywood drum	7065

COPYRIGHT VDA 2026

Applicable codes

Code	Name/description	Code list
YH	Composite packaging, plastic receptacle in plywood box	7065
YJ	Composite packaging, plastic receptacle in fibre drum	7065
YK	Composite packaging, plastic receptacle in fibreboard box	7065
YL	Composite packaging, plastic receptacle in plastic drum	7065
YM	Composite packaging, plastic receptacle in solid plastic box	7065
YN	Composite packaging, glass receptacle in steel drum	7065
YP	Composite packaging, glass receptacle in steel crate box	7065
YQ	Composite packaging, glass receptacle in aluminium drum	7065
YR	Composite packaging, glass receptacle in aluminium crate	7065
YS	Composite packaging, glass receptacle in wooden box	7065
YT	Composite packaging, glass receptacle in plywood drum	7065
YV	Composite packaging, glass receptacle in wickerwork hamper	7065
YW	Composite packaging, glass receptacle in fibre drum	7065
YX	Composite packaging, glass receptacle in fibreboard box	7065
YY	Composite packaging, glass receptacle in expandable plastic pack	7065
YZ	Composite packaging, glass receptacle in solid plastic pack	7065
ZA	Intermediate bulk container, paper, multi-wall	7065
ZB	Bag, large	7065
ZC	Intermediate bulk container, paper, multi-wall, water resistant	7065
ZD	Intermediate bulk container, rigid plastic, with structural equipment, solids	7065
ZF	Intermediate bulk container, rigid plastic, freestanding, solids	7065
ZG	Intermediate bulk container, rigid plastic, with structural equipment, pressurised	7065
ZH	Intermediate bulk container, rigid plastic, freestanding, pressurised	7065
ZJ	Intermediate bulk container, rigid plastic, with structural equipment, liquids	7065
ZK	Intermediate bulk container, rigid plastic, freestanding, liquids	7065
ZL	Intermediate bulk container, composite, rigid plastic, solids	7065
ZM	Intermediate bulk container, composite, flexible plastic, solids	7065
ZN	Intermediate bulk container, composite, rigid plastic, pressurised	7065
ZP	Intermediate bulk container, composite, flexible plastic, pressurised	7065
ZQ	Intermediate bulk container, composite, rigid plastic, liquids	7065
ZR	Intermediate bulk container, composite, flexible plastic, liquids	7065
ZS	Intermediate bulk container, composite	7065
ZT	Intermediate bulk container, fibreboard	7065
ZU	Intermediate bulk container, flexible	7065
ZV	Intermediate bulk container, metal, other than steel	7065
ZW	Intermediate bulk container, natural wood	7065
ZX	Intermediate bulk container, plywood	7065
ZY	Intermediate bulk container, reconstituted wood	7065
ZZ	Mutually defined	7065

7075 Packaging level code

Code	Name/description	Code list
5	Shipment level	7075

7077 Description format code

Code	Name/description	Code list
X	Semi-structured (code + text)	7077

7143 Item type identification code

Code	Name/description	Code list
SA	Supplier's article number	7143

7233 Packaging related description code

Code	Name/description	Code list
35	Type of package	7233

COPYRIGHT VDA 2026

Applicable codes

7405 Object identification code qualifier

Code	Name/description	Code list
BU	Package buyer assigned identifier	7405
ML	Marking/label number	7405
X01	Package identification, assigned by the logistics service provider	7405

7511 Marking type code

Code	Name/description	Code list
3J	Unique license plate number - JIS handling unit with trays	JAI019
4J	Unique license plate number - JIS handling unit with 1..n JIS packages	JAI019
5J	Unique license plate number assigned to a transport handling unit with inner handling units, packed with unlike items.	JAI019
6J	Unique license plate number assigned to a transport handling unit with inner handling units, all packed with like items.	JAI019

8051 Transport stage code qualifier

Code	Name/description	Code list
X01	Current transport leg	ODDC156(1)
12	At departure	8051

8053 Equipment type code qualifier

Code	Name/description	Code list
CN	Container	8053
RR	Rail car	8053
SW	Swap body	8053
TE	Trailer	8053

8067 Transport mode name code

Code	Name/description	Code list
20	Rail transport	8067
23	Trailers or road vehicles being transported by rail	8067
30	Road transport	8067
40	Air transport	8067
50	Mail	8067

8179 Transport means description code

Code	Name/description	Code list
T01	Eurotrailer H 2.6, W 2.48, L 13.6 tarpauline or box	ODDC087(1)
T02	Megatrailer H 3.0, W 2.48, L 13.6 tarpauline or box	ODDC087(1)
T03	Jumbo swap body L 7.82, H 3.0, W 2.48 m	ODDC087(1)
T04	Jumbo trailer pull	ODDC087(1)
T05	7.5 ton	ODDC087(1)
T06	VAN / bus	ODDC087(1)
T07	Car	ODDC087(1)
T08	Aircraft	ODDC087(1)
T09	Ocean Vessel	ODDC087(1)
T10	Gigaliner	ODDC087(1)
T11	Tautliner	ODDC087(1)
T12	Railway wagon	ODDC087(1)
T13	Gooseneck Chassis	ODDC087(1)

8335 Movement type description code

Code	Name/description	Code list
X01	Full truck load - with separate tender	ODDC166(1)
X02	Full truck load - within the scope of area contract freight forwarder	ODDC166(1)
X03	Milk run during unloading - with separate tender, direct contract	ODDC166(1)
X04	Milk run during unloading - within the scope of area contract freight forwarder	ODDC166(1)
X05	Distribution by area contract freight forwarder	ODDC166(1)

COPYRIGHT VDA 2026

Applicable codes

Code	Name/description	Code list
X06	Milk run during loading - with separate tender, direct contract	ODDC166(1)
X07	Milk run during loading - within the scope of area contract freight forwarder	ODDC166(1)
X08	Milk run during loading and unloading - with separate tender, direct contract	ODDC166(1)
X09	Milk run during loading and unloading - within the scope of area contract freight forwarder	ODDC166(1)
X10	Full Truck Load - with separate tender transport leg ship-from to consolidation centre / cross-dock	ODDC166(1)
X11	Full Truck Load - with separate tender for transport leg cros-dock to cross-dock	ODDC166(1)
X12	Full Truck Load - with separate tender for transport leg cross-dock to ship-to	ODDC166(1)
X13	Full Container Load - with separate tender from ship-from to ship-to	ODDC166(1)
X14	Less than Full Container Load - with separate tender for transport leg from ship-from to consolidation centre / cross-dock	ODDC166(1)
X15	Less than Full Container Load - with separate tender for transport leg cross-dock to cross-dock	ODDC166(1)
X16	Less than Full Container Load - with separate tender for transport leg cross-dock to ship-to	ODDC166(1)
X17	Courier Express Parcel (CEP)	ODDC166(1)
X18	Special transport with frame contract	ODDC166(1)
X19	Special transport spot market	ODDC166(1)

8453 Transport means nationality code

Code	Name/description	Code list
AD	ANDORRA	8453
AE	UNITED ARAB EMIRATES	8453
AF	AFGHANISTAN	8453
AG	ANTIGUA AND BARBUDA	8453
AI	ANGUILLA	8453
AL	ALBANIA	8453
AM	ARMENIA	8453
AN	NETHERLANDS ANTILLES	8453
AO	ANGOLA	8453
AQ	ANTARCTICA	8453
AR	ARGENTINA	8453
AS	AMERICAN SAMOA	8453
AT	AUSTRIA	8453
AU	AUSTRALIA	8453
AW	ARUBA	8453
AX	ÅLAND ISLANDS	8453
AZ	AZERBAIJAN	8453
BA	BOSNIA AND HERZEGOVINA	8453
BB	BARBADOS	8453
BD	BANGLADESH	8453
BE	BELGIUM	8453
BF	BURKINA FASO	8453
BG	BULGARIA	8453
BH	BAHRAIN	8453
BI	BURUNDI	8453
BJ	BENIN	8453
BL	SAINT BARTHÉLEMY	8453
BM	BERMUDA	8453
BN	BRUNEI DARUSSALAM	8453
BO	BOLIVIA (PLURINATIONAL STATE OF)	8453
BQ	BONAIRE, SINT EUSTATIUS AND SABA	8453
BR	BRAZIL	8453
BS	BAHAMAS	8453
BT	BHUTAN	8453
BV	BOUVET ISLAND	8453

COPYRIGHT VDA 2026

Applicable codes

Code	Name/description	Code list
BW	BOTSWANA	8453
BY	BELARUS	8453
BZ	BELIZE	8453
CA	CANADA	8453
CC	COCOS (KEELING) ISLANDS	8453
CD	CONGO, DEMOCRATIC REPUBLIC OF THE	8453
CF	CENTRAL AFRICAN REPUBLIC	8453
CG	CONGO	8453
CH	SWITZERLAND	8453
CI	COTE D'IVOIRE	8453
CK	COOK ISLANDS	8453
CL	CHILE	8453
CM	CAMEROON	8453
CN	CHINA	8453
CO	COLOMBIA	8453
CR	COSTA RICA	8453
CS	SERBIA AND MONTENEGRO	8453
CU	CUBA	8453
CV	CAPE VERDE	8453
CW	CURAÇAO	8453
CX	CHRISTMAS ISLAND	8453
CY	CYPRUS	8453
CZ	CZECHIA	8453
DE	GERMANY	8453
DJ	DJIBOUTI	8453
DK	DENMARK	8453
DM	DOMINICA	8453
DO	DOMINICAN REPUBLIC	8453
DZ	ALGERIA	8453
EC	ECUADOR	8453
EE	ESTONIA	8453
EG	EGYPT	8453
EH	WESTERN SAHARA	8453
ER	ERITREA	8453
ES	SPAIN	8453
ET	ETHIOPIA	8453
FI	FINLAND	8453
FJ	FIJI	8453
FK	FALKLAND ISLANDS (MALVINAS)	8453
FM	MICRONESIA (FEDERATED STATES OF)	8453
FO	FAROE ISLANDS	8453
FR	FRANCE	8453
GA	GABON	8453
GB	UNITED KINGDOM OF GREAT BRITAIN AND NORTHERN IRELAND	8453
GD	GRENADA	8453
GE	GEORGIA	8453
GF	FRENCH GUIANA	8453
GG	GUERNSEY	8453
GH	GHANA	8453
GI	GIBRALTAR	8453
GL	GREENLAND	8453
GM	GAMBIA	8453
GN	GUINEA	8453
GP	GUADELOUPE	8453
GQ	EQUATORIAL GUINEA	8453

COPYRIGHT VDA 2026

Applicable codes

Code	Name/description	Code list
GR	GREECE	8453
GS	SOUTH GEORGIA AND THE SOUTH SANDWICH ISLANDS	8453
GT	GUATEMALA	8453
GU	GUAM	8453
GW	GUINEA-BISSAU	8453
GY	GUYANA	8453
HK	HONG KONG	8453
HM	HEARD ISLAND AND MCDONALD ISLANDS	8453
HN	HONDURAS	8453
HR	CROATIA	8453
HT	HAITI	8453
HU	HUNGARY	8453
ID	INDONESIA	8453
IE	IRELAND	8453
IL	ISRAEL	8453
IM	ISLE OF MAN	8453
IN	INDIA	8453
IO	BRITISH INDIAN OCEAN TERRITORY	8453
IQ	IRAQ	8453
IR	IRAN (ISLAMIC REPUBLIC OF)	8453
IS	ICELAND	8453
IT	ITALY	8453
JE	JERSEY	8453
JM	JAMAICA	8453
JO	JORDAN	8453
JP	JAPAN	8453
KE	KENYA	8453
KG	KYRGYZSTAN	8453
KH	CAMBODIA	8453
KI	KIRIBATI	8453
KM	COMOROS	8453
KN	SAINT KITTS AND NEVIS	8453
KP	KOREA (DEMOCRATIC PEOPLE'S REPUBLIC OF)	8453
KR	KOREA, REPUBLIC OF	8453
KW	KUWAIT	8453
KY	CAYMAN ISLANDS	8453
KZ	KAZAKHSTAN	8453
LA	LAO PEOPLE'S DEMOCRATIC REPUBLIC	8453
LB	LEBANON	8453
LC	SAINT LUCIA	8453
LI	LIECHTENSTEIN	8453
LK	SRI LANKA	8453
LR	LIBERIA	8453
LS	LESOTHO	8453
LT	LITHUANIA	8453
LU	LUXEMBOURG	8453
LV	LATVIA	8453
LY	LIBYA	8453
MA	MOROCCO	8453
MC	MONACO	8453
MD	MOLDOVA, REPUBLIC OF	8453
ME	MONTENEGRO	8453
MF	SAINT MARTIN (FRENCH PART)	8453
MG	MADAGASCAR	8453
MH	MARSHALL ISLANDS	8453

COPYRIGHT VDA 2026

Applicable codes

Code	Name/description	Code list
MK	MACEDONIA, THE FORMER YUGOSLAV REPUBLIC OF	8453
ML	MALI	8453
MM	MYANMAR	8453
MN	MONGOLIA	8453
MO	MACAO	8453
MP	NORTHERN MARIANA ISLANDS	8453
MQ	MARTINIQUE	8453
MR	MAURITANIA	8453
MS	MONTSERRAT	8453
MT	MALTA	8453
MU	MAURITIUS	8453
MV	MALDIVES	8453
MW	MALAWI	8453
MX	MEXICO	8453
MY	MALAYSIA	8453
MZ	MOZAMBIQUE	8453
NA	NAMIBIA	8453
NC	NEW CALEDONIA	8453
NE	NIGER	8453
NF	NORFOLK ISLAND	8453
NG	NIGERIA	8453
NI	NICARAGUA	8453
NL	NETHERLANDS	8453
NO	NORWAY	8453
NP	NEPAL	8453
NR	NAURU	8453
NU	NIUE	8453
NZ	NEW ZEALAND	8453
OM	OMAN	8453
PA	PANAMA	8453
PE	PERU	8453
PF	FRENCH POLYNESIA	8453
PG	PAPUA NEW GUINEA	8453
PH	PHILIPPINES	8453
PK	PAKISTAN	8453
PL	POLAND	8453
PM	SAINT PIERRE AND MIQUELON	8453
PN	PITCAIRN	8453
PR	PUERTO RICO	8453
PS	PALESTINE, STATE OF	8453
PT	PORTUGAL	8453
PW	PALAU	8453
PY	PARAGUAY	8453
QA	QATAR	8453
RE	REUNION	8453
RO	ROMANIA	8453
RS	SERBIA	8453
RU	RUSSIAN FEDERATION	8453
RW	RWANDA	8453
SA	SAUDI ARABIA	8453
SB	SOLOMON ISLANDS	8453
SC	SEYCHELLES	8453
SD	SUDAN	8453
SE	SWEDEN	8453
SG	SINGAPORE	8453

COPYRIGHT VDA 2026

Applicable codes

Code	Name/description	Code list
SH	SAINT HELENA, ASCENSION AND TRISTAN DA CUNHA	8453
SI	SLOVENIA	8453
SJ	SVALBARD AND JAN MAYEN	8453
SK	SLOVAKIA	8453
SL	SIERRA LEONE	8453
SM	SAN MARINO	8453
SN	SENEGAL	8453
SO	SOMALIA	8453
SR	SURINAME	8453
SS	SOUTH SUDAN	8453
ST	SAO TOME AND PRINCIPE	8453
SV	EL SALVADOR	8453
SX	SINT MAARTEN (DUTCH PART)	8453
SY	SYRIAN ARAB REPUBLIC	8453
SZ	SWAZILAND	8453
TC	TURKS AND CAICOS ISLANDS	8453
TD	CHAD	8453
TF	FRENCH SOUTHERN TERRITORIES	8453
TG	TOGO	8453
TH	THAILAND	8453
TJ	TAJIKISTAN	8453
TK	TOKELAU	8453
TL	TIMOR-LESTE	8453
TM	TURKMENISTAN	8453
TN	TUNISIA	8453
TO	TONGA	8453
TR	TURKEY	8453
TT	TRINIDAD AND TOBAGO	8453
TV	TUVALU	8453
TW	TAIWAN, PROVINCE OF CHINA	8453
TZ	TANZANIA, UNITED REPUBLIC OF	8453
UA	UKRAINE	8453
UG	UGANDA	8453
UM	UNITED STATES MINOR OUTLYING ISLANDS	8453
US	UNITED STATES OF AMERICA	8453
UY	URUGUAY	8453
UZ	UZBEKISTAN	8453
VA	HOLY SEE	8453
VC	SAINT VINCENT AND THE GRENADINES	8453
VE	VENEZUELA (BOLIVARIAN REPUBLIC OF)	8453
VG	VIRGIN ISLANDS, BRITISH	8453
VI	VIRGIN ISLANDS, U.S.	8453
VN	VIET NAM	8453
VU	VANUATU	8453
WF	WALLIS AND FUTUNA	8453
WS	SAMOA	8453
YE	YEMEN	8453
YT	MAYOTTE	8453
YU	YUGOSLAVIA	8453
ZA	SOUTH AFRICA	8453
ZM	ZAMBIA	8453
ZW	ZIMBABWE	8453

8457 Excess transportation reason code

COPYRIGHT VDA 2026

Applicable codes

Code	Name/description	Code list
ZZZ	Mutually defined	8457

8459 Excess transportation responsibility code

Code	Name/description	Code list
X	Responsibility to be determined	8459

COPYRIGHT VDA 2026